LANOHA DEVELOPMENT

HAWTHORNE COURT MULTI-TENANT BUILDING

17662 WELCH PLAZA
OMAHA, NE 68154

10/18/2024
CA0666

DRAWING INDEX

VICINITY PLAN
SCALE: 1/8" = 1'-0"

NORTH

ARCHITECT
DANIEL J. KERNS
A-4463
10/17/24
STATE OF NEBRASKA

I, **DANIEL J KERNS**
AM THE COORDINATING PROFESSIONAL ON:
LANOHA DEVELOPMENT
HAWTHORNE COURT
MULTI-TENANT BUILDING

DESIGNED:	NJB	ISSUE DATE:	10/18/2024	
		REVISIONS:		
DRAWN:	NJB	No.:	DATE:	BY: DESCRIPTION:
CHECKED:	DJK			

SCHEMMER
Design with Purpose. Build with Confidence.
1044 North 115th Street, Suite 300, Omaha, Nebraska 68154 | 402.493.4800
CA0666

LANOHA DEVELOPMENT
HAWTHORNE COURT MULTI-TENANT BUILDING
17662 WELCH PLAZA
OMAHA, NE 68154
COVER SHEET

PROJECT NO.: **010347.001**

0

CODE SUMMARY

APPLICABLE CODES	
BUILDING :	2018 IBC
ACCESSIBILITY :	2010 ADA
LIFE SAFETY :	2012 NFPA 101
ENERGY :	2018 IECC, ICC A117.1-2009
MECHANICAL :	2012 IMC
PLUMBING :	2018 OPC
ELECTRICAL :	2023 NEC
OCCUPANCY GROUP :	B or M
TYPE OF CONSTRUCTION :	IIB
HEIGHT AND AREA LIMITS	
MAXIMUM ALLOWED HEIGHT	40'
MAXIMUM ALLOWED AREA	12,500 SF
MIXED USE SEPARATIONS :	NA
EXTERIOR WALL OPENING LIMITS :	- -
DRAFTSTOPS :	NA
FIRE PROTECTIVE SYSTEMS	
AUTO FIRE SUPPRESSION :	NA
STANDPIPE :	NA
FIRE ALARM SYSTEM :	NA
AUTO FIRE DETECTION :	NA
SMOKE DETECTION :	NA

FIRE RESISTANCE OF STRUCTURAL ELEMENTS	RATING (HOURS)	DESIGN NUMBER
EXTERIOR WALLS		
LOAD BEARING WALLS	0	--
NON-LOAD BEARING WALLS	0	--
FIRE SEPARATION ASSEMBLIES		
EXITS	0	--
SHAFTS / HOISTWAYS	0	--
DWELLING UNIT SEPARATIONS	NA	--
INTERIOR LOAD BEARING WALLS, COLUMNS, FRAMING	0	--
FLOOR CONSTRUCTION	0	--
ROOF CONSTRUCTION	0	--
FIRE WALLS	NA	--
CALCULATIONS		
DOOR	0.2" / OCC	
STAIR	0.3" / OCC	

CODE COMPLIANCE LEGEND

- FIRE BARRIER (X HOURS)
- FIRE PARTITION (X HOURS)
- SMOKE BARRIER (X HOURS)
- SMOKE PARTITION (X HOURS)
- BUILDING SEPARATION (X HOURS)
- INCIDENTAL OCCUPANCY
- ACCESSORY OCCUPANCY
- NOT HABITABLE OCCUPANCY
- 10 — NUMBER OF OCCUPANTS PER ROOM
- **COMMON PATH DISTANCE** XXX'-XX"
- 99 — OCCUPANCY ALONG PATH
- **DEAD-END DISTANCE** XXX'-XX"
- 75' — NEW FIRE EXTINGUISHER-INSIDE RECESSED CABINET -(FE1)

NOTES:

- CONTRACTOR SHALL PROVIDE PERMANENT SIGNAGE OR STENCILING WITHIN CEILING PLENUM AT ALL FIRE RATED WALLS, SMOKE BARRIERS & SMOKE PARTITIONS. LETTERING SHALL BE AT LEAST 1/2" IN HEIGHT WITH THE WORDING: "FIRE AND/OR SMOKE BARRIER - PROTECT ALL OPENINGS.; REPEAT AT INTERVALS NOT EXCEEDING 30'-0" MEASURED HORIZONTALLY ALONG THE PARTITION WALL.
- SEAL PENETRATIONS IN FIRE RATED SMOKE BARRIERS, FIRE RATED BARRIERS & SMOKE BARRIERS.

BUILDING STATISTICS

AREA (GROSS SQUARE FOOTAGE) :

FIRST FLOOR	9090 SF
TOTAL	**9090 SF**
NUMBER OF STORIES :	1

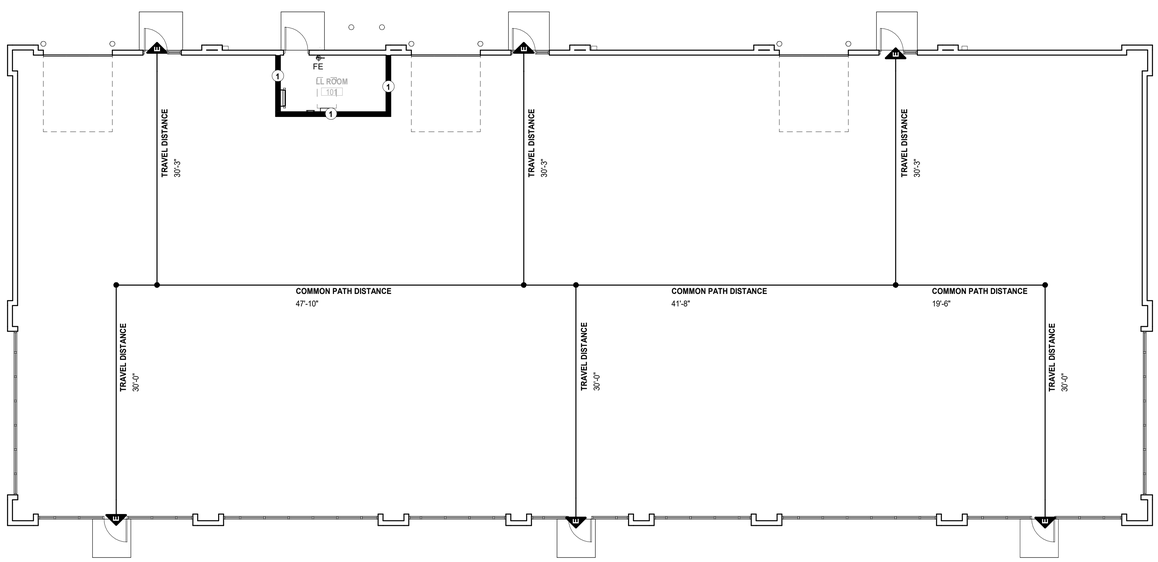

FIRST FLOOR - CODE REVIEW PLAN

SCALE: 1/8" = 1'-0"

DESIGNED:	NJB	ISSUE DATE:	10/18/2024
DRAWN:	NJB	REVISIONS:	
CHECKED:	DJK	No.: DATE: BY: DESCRIPTION:	

THIS DRAWING IS BEING MADE AVAILABLE BY SCHEMMER FOR USE AS INTERPRETED BY ARCHITECT IN ACCORDANCE WITH SCHEMMER'S AGREEMENT WITH ARCHITECT. NEITHER ARCHITECT NOR SCHEMMER ASSUMES NO RESPONSIBILITY FOR ANY USE OF THIS DRAWING OR ANY PART THEREOF INCONSISTENT WITH THE ACCEPTANCE WITH THE TERMS OF SCHEMMER'S AGREEMENT.

ARCHITECT DANIEL J. KERNS A-4463 10/18/24 STATE OF NEBRASKA

SCHEMMER
Design with Purpose. Build with Confidence.
1044 North 115th Street, Suite 300, Omaha, Nebraska 68154 | 402.493.4800
CA0666

LANOHA DEVELOPMENT
HAWTHORNE COURT MULTI-TENANT BUILDING
17662 WELCH PLAZA
OMAHA, NE 68154
ARCHITECTURAL CODE COMPLIANCE

PROJECT NO.: 010347.001

ACC01

EXISTING

AIR	AIR AIR AIR
BUILDING OVERHANG	
CABLE	CA CA CA
CONDUIT	
CONSTRUCTION FENCE	CF CF CF
CREEK FLOW LINE	
CREEK FLOW DIRECTION	
DRAIN TILES	DR DR DR
ELECTRIC	E E E
EFF LINE	EFF EFF
FENCE	X X X
FENCE – BARBED WIRE	
FENCE – STEEL	
FENCE – WIRE	
FENCE – WOOD	
FIBER OPTICS	FO FO FO
FLOOD PLAIN	FP FP FP
FLOW ARROW	
FLOW LINE	
FORCE MAIN	FM FM FM
GAS	G G G
GRAVEL AND DIRT EDGE	
GUARD RAIL	
IRRIGATION	IRR IRR IRR
MAIN DRAIN LINE	MD
NON POTABLE WATER	NPW NPW NPW
OIL	OIL OIL OIL
OIL AND GAS	O/G O/G O/G
OVERHEAD POWER	OHP OHP OHP
OVERHEAD TELEPHONE	OHT OHT OHT
OVERHEAD UTILITY	OHU OHU OHU
POWER	P P P
RAILROAD TRACKS	
RAW WATER	RW RW RW
RECIRCULATION	RECIRC
ROOF DRAIN	RD RD RD
SANITARY SEWER	SS SS SS
STORM SEWER	ST ST ST
STREAM	
TELEPHONE	T T T
UNDER DRAIN	UD UD UD
UNIDENTIFIED UTILITY	UU UU UU
UTILITY	U U U
VEGETATION LINE	
WATER	W W W
WATERS EDGE	

RECORD

AIR	R-A R-A R-A
CABLE	R-CA R-CA R-CA
ELECTRIC	R-E R-E R-E
FIBER OPTIC	R-FO R-FO R-FO
GAS	R-G R-G R-G
SANITARY SEWER	R-SS R-SS R-SS
STORM SEWER	R-ST R-ST R-ST
TELEPHONE	R-T R-T R-T
UNDERGROUND POWER	R-UGP R-UGP
UTILITY	R-U R-U R-U
WATER	R-W R-W R-W

SANITARY CLEAN OUT	CO
SANITARY MANHOLE	S
SEWER WARNING SIGN	
SEPTIC TANK	S
AREA INLET ROUND	
AREA INLET SQUARE	
GRATE INLET	
GRATE INLET W/ HOOD	
STORM MANHOLE	D
STORM PIPE END	
4" CURB INLET	
CURB INLET LEFT	
CURB INLET RIGHT	
DOWN SPOUT/ROOF DRAIN	DS
FLARED END SECTION	
CONTINUE SYMBOL	
CABLE MANHOLE	C
CABLE WARNING SIGN	
CABLE PEDESTAL	
CABLE PULLBOX	
LIGHT POLE	
YARD LIGHT	
GROUND LIGHT	
BLDG MOUNTED LIGHT	
STREET LIGHT	
POWER POLE	
H STRUCTURE	
H STRUCTURE W/ TRANSFORMER	
ELECTRIC MANHOLE	E
ELECTRIC METER	
ELECTRIC PEDESTAL	
ELECTRIC PULLBOX	
ELECTRIC TRANSFORMER	E
ELECTRIC VAULT	EV
ELECTRIC WARNING SIGN	
GUY	
FIBER OPTIC MANHOLE	FO
FIBER OPTIC PULL BOX	
FIBER OPTIC VAULT	FV
FIBER OPTIC PEDESTAL	F
FIBER OPTIC WARNING SIGN	
FUEL TANK	F
FUEL CAP	F
FUEL PUMP	F
GAS CURB STOP	
GAS MANHOLE	G
GAS METER	
GAS VALVE	
GAS WARNING SIGN	
TELEPHONE MANHOLE	T
TELEPHONE PEDESTAL	
TELEPHONE PULLBOX	
TELEPHONE WARNING SIGN	
UNIDENTIFIED MANHOLE	U
UNIDENTIFIED UTILITY PEDESTAL	
UNIDENTIFIED VALVE	
UNIDENTIFIED PULLBOX	
WATER CURB STOP	
WATER MANHOLE	W
WATER METER	
WATER VALVE	

WATER WARNING SIGN	
AUTO SPRINKLER BUILDING	
FIRE HYDRANT	
POST INDICATOR VALVE	
YARD HYDRANT	
IRRIGATION CONTROL VALVE	
IRRIGATION SPRINKLER HEAD	
WELL	
MONITORING WELL	
TABLE	
SATELLITE DISH	
MAILBOX	MB
MISCELLANEOUS POINT	
VENT	V
TOWER	
PROPANE TANK	P
FLAGPOLE	
AIR CONDITIONING UNIT	
DRINKING FOUNTAIN	
BBQ PIT	BBQ
BENCH	
BOLLARD	
BORE HOLE	
COLUMN ROUND	
COLUMN SQUARE	
VACUUM	V
TREE DECIDUOUS	
TREE CONIFEROUS	
BUSH	
BOULDER	
ARROW LEFT	
ARROW RIGHT	
ARROW STRAIGHT	
STRIPING "ONLY"	ONLY
BICYCLE STRIPING	
HANDICAP SYMBOL	
TRAFFIC SIGNAL	
TRAFFIC SIGNAL PEDESTAL	
TRAFFIC SIGNAL PULL BOX	
PARKING METER	
SIGN	
STOP SIGN	STOP
YIELD SIGN	
RR CROSSING ARM	
BENCHMARK	
TEMPORARY BENCHMARK	
ROW MARKER	
CONTROL POINT	
MONUMENT FOUND	
MONUMENT SET	
WITNESS CORNER	
COMPUTED CORNER	
SECTION CORNER TIE	
SECTION CORNER	

PROPOSED

UTILITY

AIR	AIR AIR AIR
CABLE	CA CA CA
CONDUIT	
CONSTRUCTION FENCE	CF CF CF
DRAIN TILES	DR DR DR
FENCE	X X X
FENCE – BARBED WIRE	
FENCE – STEEL	
FENCE – WIRE	
FENCE – WOOD	
FIBER OPTICS	FO FO FO
FLOW ARROW	
FORCE MAIN [SINGLE LINE]	FM FM FM
FORCE MAIN [DOUBLE LINE]	8"FM
GAS	G G G
GRAVEL AND DIRT EDGE	
IRRIGATION	IRR IRR IRR
LIMITS OF CONSTRUCTION	
NON POTABLE WATER	NPW NPW
OIL	OIL OIL OIL
OIL AND GAS	O/G O/G
POWER	P P P
RAW WATER	RW RW RW
ROOF DRAIN	RD RD RD
SANITARY SEWER [SINGLE LINE]	SS SS SS
SANITARY SEWER [DOUBLE LINE]	8"SS
SANITARY SERVICE RISER	8"SS
STORM SEWER [SINGLE LINE]	ST ST ST
STORM SEWER [DOUBLE LINE]	18"ST
TELEPHONE	T T T
UNDER DRAIN	UD UD UD
UTILITY	U U U
WATER [SINGLE LINE]	W W W
WATER [DOUBLE LINE]	6"W
DROP MANHOLE	
SLOTTED UNDER DRAIN	8"DR
WATER	2"W
AIR TAP	
FIRE HYDRANT	
TEE	
BEND	
REDUCER	
VALVE GATE	
MANHOLE	
FLARED END SECTION	
CURB INLET	
AREA INLET	
GRATE INLET	

GRADING

CONTOUR	1100
FUTURE CONTOUR	1100
EXISTING CONTOUR	1100
WETLANDS AREA NOT TO BE DISTURBED	
FILL AREA	
STABILIZED ACCESS ROAD	
VEGETATED BUFFER STRIP	
SPOT ELEVATION	1000.00
LIMITS OF DISTURBED AREA	LDA LDA LDA
FLOOD PLAIN	FP FP FP

DRAINAGE

100 YEAR	100 YR 100 YR
500 YEAR	500 YR 500 YR
2 YEAR EGL	2YR EGL 2YR EGL
5 YEAR EGL	5YR EGL 5YR EGL
10 YEAR EGL	10YR EGL 10YR EGL
100 YEAR EGL	100YR EGL
2 YEAR HGL	2YR HGL 2YR HGL
5 YEAR HGL	5YR HGL 5YR HGL
10 YEAR HGL	10YR HGL 10YR HGL
100 YEAR HGL	100YR HGL
FLOOD WAY	FLDWY FLDWY
RIDGE	
FLOW PATH	
DRAINAGE AREA NAME	
DRAINAGE AREA RUNOFF COEFFICIENT	C= AC.
DRAINAGE BASIN DELINEATION	
DRAINAGE SUB BASIN DELINEATION	
TIME OF CONCENTRATION DRAINAGE PATH	GRA 254 @ 7.85%

EROSION CONTROL

EARTH BERM	EB EB EB
EARTH DIVERSION	ED ED ED
EROSION CONTROL LOG	ECL ECL ECL
FILL DIVERSION	FD FD FD
INTERCEPTOR DIKE	ID ID ID
INTERCEPTOR SWALE	
LEVEL SPREADER	
LEVEL TERRACE	LT LT LT
SEDIMENT CONTROL LOG	SCL SCL
SILT FENCE	SF SF SF
STRAW WATTLE	SW SW SW
TEMPORARY DITCH	TD TD TD
BIORETENTION GARDEN	
WATTLE	W
VEHICLE TRACKING PAD	
TEMPORARY SEEDING	
STRAW HAY BALE	SHB
SLOPE PROTECTION	SP
PERMANENT SEEDING	
INLET PROTECTION	IP

PAVEMENT

PAVEMENT	
PCC CURB AND GUTTER	
RETAINING WALL	
X" PCC PAVEMENT	
ASPHALT PAVEMENT	
SIDEWALK PAVEMENT	
PAVING BARRICADE	
BUILDING	
PARKING STALL COUNT	15
FLOW LINE	
JOINT A	
JOINT B	
JOINT D	
JOINT E	
JOINT F	
JOINT G	
JOINT H	
JOINT JLC-K	
JOINT JLH-S	

PLATTING

PROPERTY/BOUNDARY LINE	
PROPOSED LOT LINE	
ADJACENT LOT LINE	
SECTION LINE	
EASEMENT	
MONUMENT SET	
MONUMENT FOUND	
SECTION CORNER	
COMPUTED CORNER	
WITNESS CORNER	

GENERAL ABBREVIATIONS

ADA	AMERICANS WITH DISABILITIES ACT	(R)	RECORD DIMENSION
ASPH	ASPHALT	RB	REBAR
BC	BACK OF CURB	RCP	REINFORCED CONCRETE PIPE
BOSW	BACK OF WALK	ROW	RIGHT OF WAY
BP	BOTTOM OF PIPE	S	SOUTH
BW	BOTTOM OF WALL	SF	SQUARE FEET
(C)	COMPUTED DIMENSION	SS	SANITARY SEWER
CATV	CABLE TELEVISION	ST	STORM
CF	CUBIC FOOT	STA	STATION
CL	CENTERLINE	STD	STANDARD
CMP	CORRUGATED METAL PIPE	SW	SIDEWALK
CONC	CONCRETE	T	TELEPHONE
CP	CONTROL POINT	TC	TOP OF CURB
CPP	CORRUGATED PLASTIC PIPE	TOF	TOP OF FOUNDATION
CY	CUBIC YARD	TOG	TOP OF GRADE
DIA	DIAMETER	TOI	TOP OF ISLAND
DIP	DUCTILE IRON PIPE	TP	TOP OF PAVEMENT
E	EAST	TS	TOP OF SLAB
ELEV	ELEVATION	TW	TOP OF WALL
EOG	EDGE OF GRAVEL	TYP.	TYPICAL
FES	FLARED END SECTION	VERT	VERTICAL
FF	FINISH FLOOR ELEVATION	W	WEST
FG	FINISHED GRADE	WQCV	WATER QUALITY CAPTURE VOLUME
FH	FIRE HYDRANT	YPC	YELLOW PLASTIC CAP
FL	FLOWLINE	TP	TOP OF PAVEMENT
G	GUTTER	TS	TOP OF SLAB
GB	GRADE BREAK	TW	TOP OF WALL
HP/LP	HIGH POINT/LOW POINT	TYP.	TYPICAL
HORIZ	HORIZONTAL	VERT	VERTICAL
HPC	HORIZONTAL POINT OF CURVATURE		
HPI	HORIZONTAL POINT OF INTERSECTION		
HPT	HORIZONTAL POINT OF TANGENCY		
HPCC	HORIZONTAL POINT OF COMPOUND CURVATURE		
HPRC	HORIZONTAL POINT OF REVERSE CURVATURE		
IE	INVERT ELEVATION		
LF	LINEAR FEET		
(M)	MEASURED DIMENSION		
MH	MANHOLE		
ME	MATCH EXISTING		
N	NORTH		
N.T.S.	NOT TO SCALE		
OT	OPEN TOP PIPE		
(P)	PLAT DIMENSION		
PL	PROPERTY LINE		
PT	PINCHED TOP PIPE		
P.V.C.	POLYVINYL CHLORIDE		
PVC	POINT OF VERTICAL CURVE		
PVI	POINT OF VERTICAL INTERSECTION		
PVT	POINT OF VERTICAL TANGENCY		
X 1020.12	SPOT ELEVATION		

LAMP RYNEARSON
LAMPRYNEARSON.COM
OMAHA, NEBRASKA
14710 W. DODGE RD., STE. 100 (402) 496.2498
NE AUTHORIZATION NO.: CA0135
FORT COLLINS, COLORADO
4715 INNOVATION DR., STE. 100 (970) 226.0342
KANSAS CITY, MISSOURI
9001 STATE LINE RD., STE. 200 (816) 861.0440
MO AUTH. NO.: E-2013011903 | LS-2019043127

PROFESSIONAL CIVIL ENGINEER
BRENDAN C. FINDALL
E-20023
10/16/2024
STATE OF NEBRASKA

BRENDAN FINDALL
E-20023

CIVIL LEGEND

WELCH PLAZA – SITE PLAN
DOUGLAS COUNTY, NEBRASKA

811 Know what's **below.** **Call** before you dig.

ALL UTILITIES ARE SHOWN BASED ON THE INFORMATION AVAILABLE TO THE ENGINEER. THE EXACT LOCATION OF ALL FACILITIES ARE SHOWN OR THAT THE LOCATION, DEPTH, AND ELEVATION ARE SHOWN ARE CORRECT. THE CONTRACTOR IS RESPONSIBLE FOR LOCATING ALL UTILITIES AND SERVICE LINES PRIOR TO CONSTRUCTION.

REVISIONS

DESIGNER / DRAFTER
RICK KELLER
DATE
10-18-2024
PROJECT NUMBER
0120156.01-020/320
BOOK AND PAGE

SHEET
C1.0

L:\Engineering\0120156 17622 Welch Plaza Fka Space Site Plan\DRAWINGS\CONSTRUCTION DRAWINGS\0120156-SITE-CD.dwg - 10/18/2024 1:11:15 PM, BRENDAN FINDALL, LAMP RYNEARSON

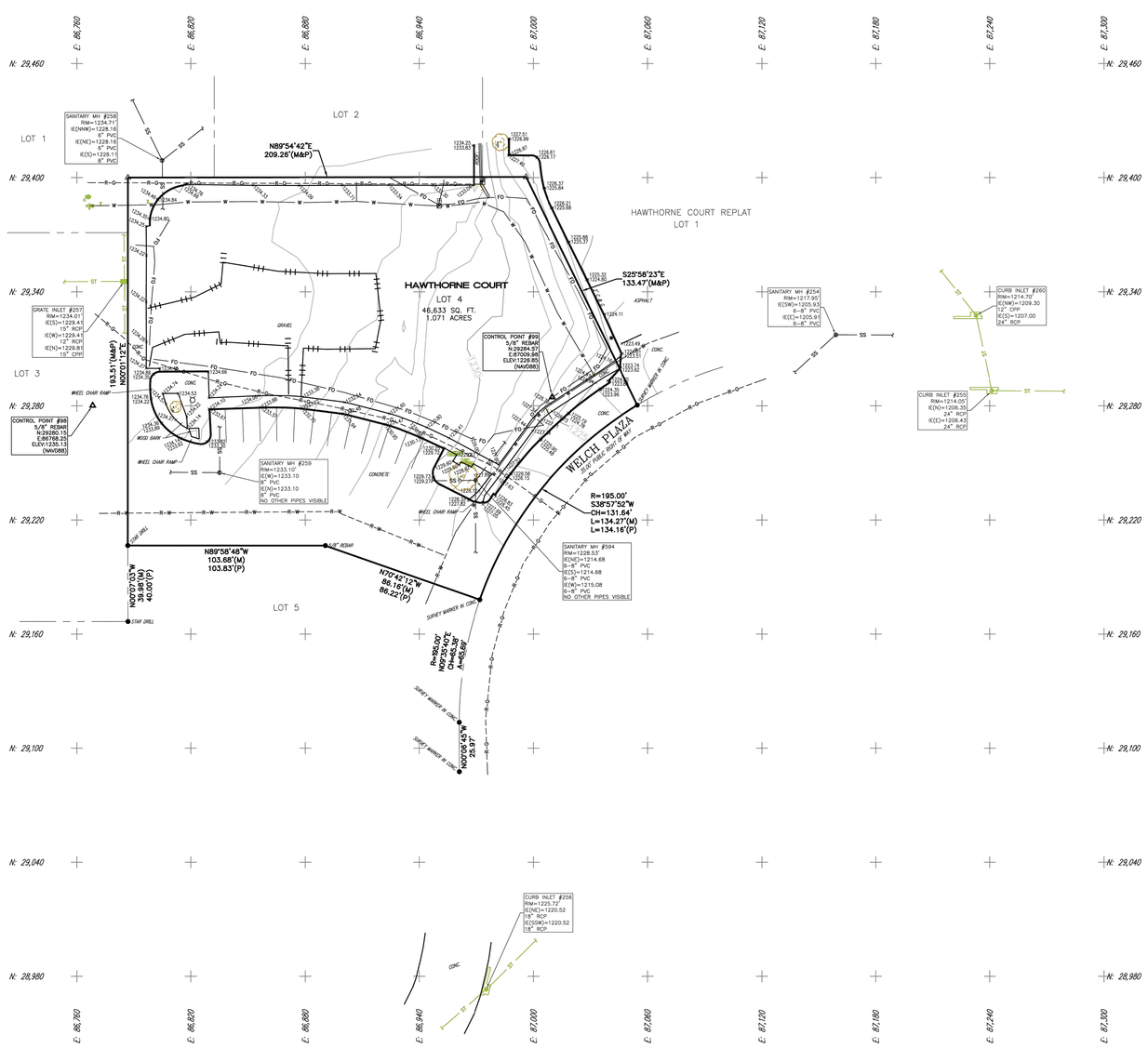

VICINITY MAP

SCALE: 1" = 30
U.S. SURVEY FEET

LEGEND

	PROPERTY LINE
	LOT LINE
SS	SANITARY SEWER
ST	STORM SEWER
FO	FIBER OPTICS
W	WATER
RG	RECORD GAS
RW	RECORD WATER
	GRAVEL AND DIRT EDGE
	CONTINUE SYMBOL
	CONTROL POINT
	CORNER SET
	CURB INLET
	DECIDUOUS TREE
	FIRE HYDRANT
	GAS WARNING SIGN
	GRATE INLET
	LIGHT GROUND
	LIGHT POLE
MB	MAILBOX
PIV	POST INDICATOR VALVE
	SANITARY MANHOLE
	STORM MANHOLE
	TELEPHONE PEDESTAL
	UNIDENTIFIED PEDESTAL
	WATER CURB STOP
	WATER VALVE
	MONUMENT FOUND
	MONUMENT SET (5/8" REBAR W/ 1 1/4" YPC STAMPED LS-693)
M	MEASURED DIMENSION
P	PLAT DIMENSION

LEGAL DESCRIPTION

LOT 4, HAWTHORNE COURT, A SUBDIVISION AS SURVEYED, PLATTED AND RECORDED IN DOUGLAS COUNTY, NEBRASKA.

CONTROL NOTE

– HORIZONTAL DATUM IS BASED ON THE DOUGLAS COUNTY LOW DISTORTION COORDINATE SYSTEM.

– VERTICAL DATUM IS BASED ON NAVD88 (GEOID–12A).

UTILITY NOTES

1. THIS DRAWING INCLUDES OBSERVED EVIDENCE OF SERVICES AND UTILITIES EVIDENT AT THE TIME OF SURVEY, RECORD LOCATIONS PROVIDED BY THOSE COMPANIES RESPONDING TO OUR REQUEST AND THOSE MARKED BY "ONE CALL"** LOCATORS. NO RESPONSIBILITY OR LIABILITY IS ASSUMED BY THE SURVEYOR FOR THE FAILURE TO SHOW ANY BURIED SERVICE AND/OR UTILITY LINES EVEN THOUGH THEY MAY EXIST. CONTACT "ONE CALL" (1–800–331–5666) PRIOR TO ANY EXCAVATION ON THIS SITE.
**TICKET NO. 202810273, DATED 10/7/2020

LAND SURVEYOR'S CERTIFICATION

I HEREBY CERTIFY THAT THIS TOPOGRAPHIC SURVEY WAS MADE BY ME OR UNDER MY DIRECT SUPERVISION AND THAT I AM A DULY LICENSED PROFESSIONAL LAND SURVEYOR UNDER THE LAWS OF THE STATE OF NEBRASKA.

DATE OF SIGNATURE:

LAMP RYNEARSON
14710 W. DODGE RD, STE. 100
OMAHA, NE 68154
402.496.2498
LampRynearson.com

TOPOGRAPHIC SURVEY

LOT 4, HAWTHORNE COURT
OMAHA, DOUGLAS COUNTY, NEBRASKA

811 Know what's below. Call before you dig.

ALL UTILITIES ARE SHOWN BASED ON THE INFORMATION AVAILABLE TO THE ENGINEER. THERE IS NO GUARANTEE ALL FACILITIES ARE SHOWN OR THAT THE LOCATION, DEPTH, AND SIZE OF EACH FACILITY IS CORRECT. THE CONTRACTOR IS RESPONSIBLE FOR LOCATING ALL UTILITIES AND SERVICE LINES PRIOR TO CONSTRUCTION.

REVISIONS

DESIGNER / DRAFTER
JON L. CARRELL / RACHEL E. RENNECKER
DATE
10/16/2020
PROJECT NUMBER
0120156.01–405
BOOK AND PAGE
20–3, 64–65

SHEET
1 OF 1

LAMP RYNEARSON
LAMPRYNEARSON.COM
OMAHA, NEBRASKA
14710 W. DODGE RD. STE. 100 (402) 496.2498
NE AUTHORIZATION NO.: CA0135
FORT COLLINS, COLORADO
4715 INNOVATION DR., STE. 100 (970) 226.0342
KANSAS CITY, MISSOURI
9001 STATE LINE RD., STE. 200 (816) 861.0440
MO AUTH. NO.: E-2013011903 | LS-2019043127

PROFESSIONAL CIVIL ENGINEER
BRENDAN C. FINDALL
E-20023
10/16/2024
STATE OF NEBRASKA

BRENDAN FINDALL
E-20023

ORIGINAL TOPOGRAPHIC SURVEY
(FOR INFORMATIONAL PUPOSES ONLY)

WELCH PLAZA – SITE PLAN
DOUGLAS COUNTY, NEBRASKA

811 Know what's below. Call before you dig.

ALL UTILITIES ARE SHOWN BASED ON THE INFORMATION AVAILABLE TO THE ENGINEER. THERE IS NO GUARANTEE ALL FACILITIES ARE SHOWN OR THAT THE LOCATION, DEPTH, AND SIZE OF EACH FACILITY IS CORRECT. THE CONTRACTOR IS RESPONSIBLE FOR LOCATING ALL UTILITIES AND SERVICE LINES PRIOR TO CONSTRUCTION.

REVISIONS

DESIGNER / DRAFTER
RICK KELLER
DATE
10–18–2024
PROJECT NUMBER
0120156.01–020/320
BOOK AND PAGE

SHEET
C2.0

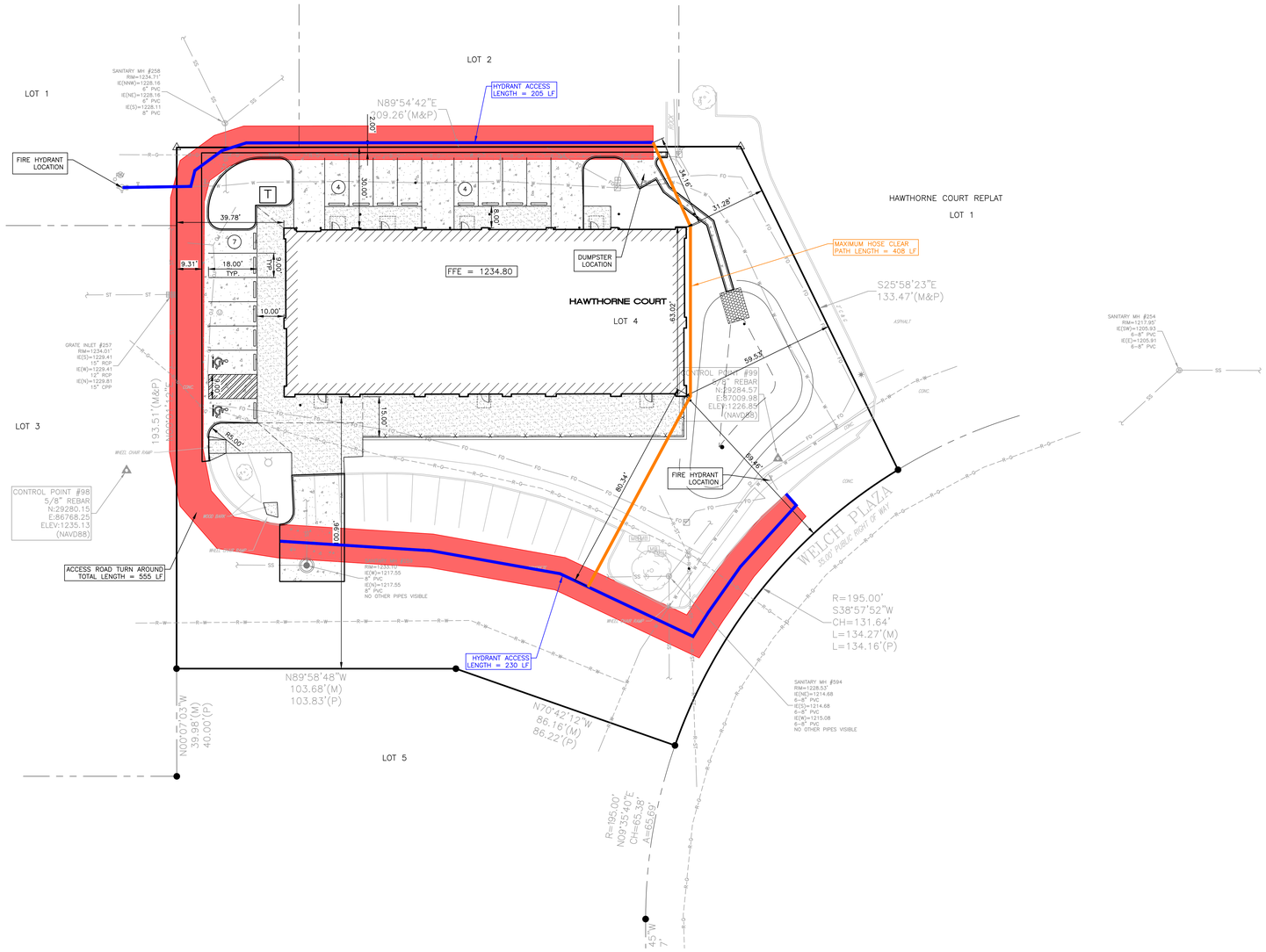

1 ZONING COMPLIANCE PLAN

LOCATION MAP

GENERAL NOTES

1. ALL SITE WORK SHALL BE IN ACCORDANCE WITH THE CITY OF OMAHA "STANDARD SPECIFICATIONS FOR PUBLIC WORKS CONSTRUCTION", 2024 EDITION AND ANY REVISIONS OR AMENDMENTS THERETO SHALL APPLY TO THIS PROJECT. EXCEPT AS MODIFIED BY THESE SPECIFICATIONS, SPECIAL CONDITIONS, AND/OR THE CONSTRUCTION DRAWINGS.
2. EXISTING UTILITIES ARE SHOWN AS A CONVENIENCE FOR THE CONTRACTOR. THE LOCATIONS OF ALL AERIAL AND UNDERGROUND UTILITIES MAY NOT BE INDICATED IN THESE PLANS. THE CONTRACTOR SHALL NOTIFY ALL UTILITY COMPANIES 48 HOURS BEFORE WORK IS STARTED TO VERIFY UTILITY LOCATIONS (ONE CALL 811).
3. BARRICADES SHALL CONFORM TO OMAHA PUBLIC WORKS "BARRICADING STANDARDS, SPECIFICATIONS, METHODS & MATERIALS", AND/OR THE "MANUAL ON UNIFORM TRAFFIC CONTROL DEVICES".
4. THE CONTRACTOR SHALL PROVIDE THE ENGINEER/ARCHITECT WITH A CONSTRUCTION RECORD DRAWING INDICATING ALL CHANGES IN GEOMETRY, GRADES, ELEVATIONS OR MATERIAL ON THE PROJECT PRIOR TO FINAL ACCEPTANCE.
5. THE CONTRACTOR IS RESPONSIBLE FOR OBTAINING ALL PERMITS REQUIRED TO COMPLETE THIS PROJECT AND IS RESPONSIBLE FOR THE PAYMENT OF ALL FEES ASSOCIATED WITH THESE PERMITS.
6. THE CONTRACTOR SHALL CONTACT THE SOILS ENGINEER TO OBSERVE THE SUBGRADE PRIOR TO PLACING PAVEMENT TO DELINEATE ANY AREAS WHERE SUBGRADE OVEREXCAVATION MAY BE REQUIRED.
7. THE CONTRACTOR SHALL VERIFY THE LOCATIONS AND ELEVATIONS OF ALL PROPOSED UTILITY CONNECTIONS WITH THE ARCHITECTURAL CONSTRUCTION DOCUMENTS.
8. THE INSTALLATION OF UTILITIES MAY REQUIRE THE DISTURBANCE OF EXISTING DRAINAGE AND EROSION CONTROL MEASURES. THESE ITEMS MAY INCLUDE SILT BASINS, LEVEL TERRACES, INTERCEPTOR SWALES, SILT FENCE AND ROCK CONSTRUCTION ENTRANCES. THE CONTRACTOR SHALL MAKE THEMSELVES AWARE OF THE EXISTING SITE CONDITIONS PRIOR TO BIDDING THIS WORK. THE FUNCTION OF THESE ITEMS MUST BE MAINTAINED THROUGHOUT CONSTRUCTION WITH EMPHASIS PLACED ON RESTORING THEIR INTEGRITY PRIOR TO ANY RAINFALL EVENT. AS PART OF THIS CONTRACT, ALL DISTURBED DRAINAGE AND EROSION CONTROL STRUCTURES SHALL BE RESTORED TO GOOD CONDITION AFTER COMPLETION OF THE WORK OR AS DIRECTED BY THE ENGINEER/ARCHITECT.
9. SEE PLAN SHEETS FOR ADDITIONAL NOTES.

LEGEND

- FIRE APPARATUS ACCESS ROAD
- FIRE HYDRANT ACCESS
- FIRE HOSE CLEAR PATH
- FIRE HYDRANT

LEGAL DESCRIPTION:	LOT 4, HAWTHORNE COURT REPLAT 5, OMAHA, NEBRASKA ZONING COMPLIANCE AND SITE PLAN REVIEW		
ADDRESS	17662 WELCH PLAZA, OMAHA, NE 68135		
APPLICANT	LANOHA DEVELOPMENT CO.		
PHONE NUMBER	402-289-5528		
USE TYPE:	MIXED USE COMMERCIAL	**IMPROVEMENT**	SITE PLAN
ZONING:	MU (SEE SECTION 55-68)		EXISTING MIX USE AGREMENT (HAWTHORNE COURT)
[X]	PERMITTED USE		CASE C12-97-269
[ ]	CONDITIONAL USE		
[ ]	SPECIAL USE		
[ ]	AIRPORT USE		
[ ]	855 REVIEW		

SITE REGULATORS (SEE SECTION 55-68):

	ALLOWED	PROPOSED	COMMENTS
A. SITE AREA	–	46,609 SF	
B. MINIMUM WIDTH	–	193.51 FEET	
C. GROSS FLOOR AREA (TOTAL FINISHED)	–	9,350 SF	
D. FAR (C/A)	–	0.20	
E. SETBACK			
FRONT YARD	–	100.96'	
STREET SIDE YARD	–	69.46'	
INTERIOR SIDE YARD	–	30'	
REAR YARD	–	39.78'	
F. HEIGHT	–	XX'	
G. BUILDING COVER (%)	–	20%	
H. IMPERVIOUS COVER (%)	–	78%	
I. PARKING REQUIREMENTS (SEE SECTION 55-734)	1 SPACE PER 500 SF = 19 SPACES	15 SPACES	
J. ACCESSIBLE PARKING (SEE SECTION 55-738)	1 SPACE	2 SPACES 2 VAN ACCESSIBLE	

LAMP RYNEARSON
LAMPRYNEARSON.COM
OMAHA, NEBRASKA
14715 W. DODGE RD., STE. 100 (402) 496.2498
NE AUTHORIZATION NO.: CA0135
FORT COLLINS, COLORADO
4715 INNOVATION DR., STE. 100 (970) 226.0342
KANSAS CITY, MISSOURI
9001 STATE LINE RD., STE. 200 (816) 361.0440
MO AUTH. NO.: E-2013011903 | LS-2019043127

0 20' 40'

PROFESSIONAL CIVIL ENGINEER
BRENDAN C. FINDALL
E-20023
10/16/2024
STATE OF NEBRASKA

BRENDAN FINDALL
E-20023

ZONING COMPLIANCE PLAN

WELCH PLAZA – SITE PLAN
DOUGLAS COUNTY, NEBRASKA

811 Know what's **below.** **Call** before you dig.

ALL UTILITIES ARE SHOWN BASED ON THE INFORMATION AVAILABLE TO THE ENGINEER. THE EXACT LOCATION OF ALL FACILITIES ARE SHOWN FOR THAT THE LOCATION, DEPTH, AND SIZE OF EACH FACILITY IS THE RESPONSIBILITY OF THE CONTRACTOR IS RESPONSIBLE FOR LOCATING ALL UTILITIES AND SERVICE LINES PRIOR TO CONSTRUCTION.

REVISIONS

DESIGNER / DRAFTER
RICK KELLER
DATE
10-18-2024
PROJECT NUMBER
0120156.01-020/320
BOOK AND PAGE

SHEET
C3.0

L:\Engineering\0120156 17622 Welch Plaza Flex Space Site Plan\DRAWINGS\CONSTRUCTION DRAWINGS\0120156-SITE-CD.dwg, 10/18/2024 11:13 PM, BRENDAN FINDALL, LAMP RYNEARSON

OMA-20240927-7576-P

NOTE:
SEE THIS SHEET FOR EROSION CONTROL MEASURES TO BE INSTALLED. THESE ARE PROPOSED LOCATIONS. IF THE CONTRACTOR WISHES TO USE ALTERNATE LOCATIONS IT MUST BE APPROVED BY THE ENGINEER.

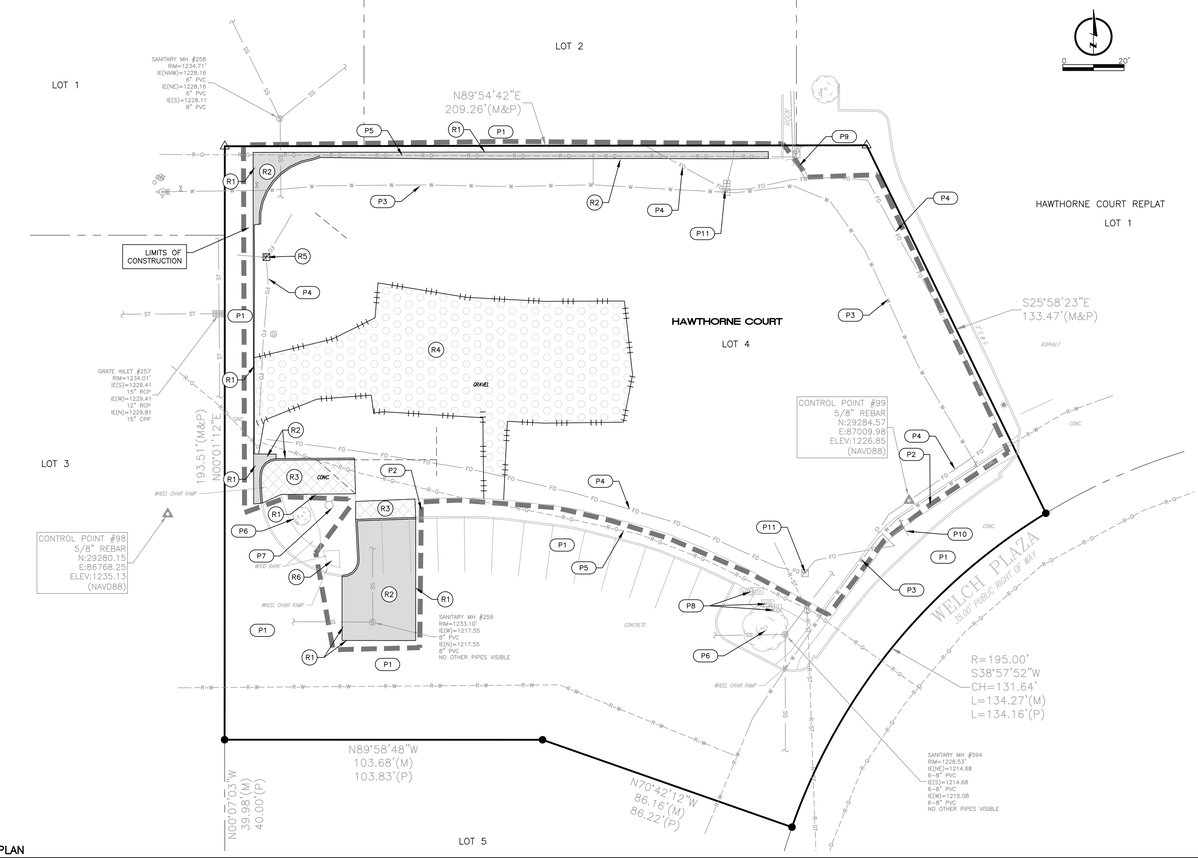

1 REMOVAL PLAN

(P) PAVING KEYNOTES

- P1 PROTECT PAVEMENT.
- P2 PROTECT SIDEWALK.
- P3 PROTECT WATER LINE.
- P4. PROTECT UNDERGROUND FIBEROPTICS.
- P5. PROTECT GAS LINE.
- P6. PROTECT TREE.
- P7. PROTECT STREET LIGHT.
- P8. PROTECT MAILBOX LOCATIONS.
- P9. PROTECT RETAINING WALL.
- P10. PROTECT FIRE HYDRANT.
- P11. PROTECT UTILITY BOX.

(R) REMOVAL KEYNOTES

- R1 SAWCUT PAVEMENT, FULL DEPTH.
- R2 REMOVE PAVEMENT TO NEAREST JOINT.
- R3 REMOVE SIDEWALK TO NEAREST JOINT.
- R4. REMOVE GRAVEL.
- R5. REMOVE AND RELOCATE FIBER OPTIC BOXES. COORDINATE RELOCATION WITH UTILITY COMPANY.
- R6. REMOVE MULCH LANDSCAPING AND REPLACE WITH 6" PCC SIDEWALK.

UTILITY CONTACTS

SANITARY SEWER:	CITY OF OMAHA SEWER MAINTENANCE	402-444-5220
POWER:	OPPD NATE GASKILL	531-226-5835 (OFFICE) 402-990-1801 (CELL)
	JEREMY CASON	531-226-5846 (OFFICE) 712-301-4228 (CELL)
TELEPHONE:	CENTURY LINK BUSINESS MARKETS GROUP	800-777-9594
CABLE TV:	COX BUSINESS SERVICES	402-934-6000
WATER:	CONTRACTOR SERVICES MUD	402-504-7014
GAS:	CONTRACTOR SERVICES MUD	402-504-7014

REMOVAL NOTES

1. THE CONTRACTOR SHALL NOTIFY THE OWNER 72 HOURS IN ADVANCE IF EXISTING UTILITIES CONFLICT WITH NEW CONSTRUCTION OR IF TEMPORARY OUTAGES ARE ANTICIPATED, INCLUDING BUT NOT LIMITED TO WATER, GAS, POWER, CABLE TELEVISION AND TELEPHONE.
2. THE CONTRACTOR SHALL PROTECT ALL EXISTING UTILITIES AND SHALL BE RESPONSIBLE FOR ANY AND ALL DAMAGES TO UTILITIES THAT ARE PERMITTED TO REMAIN IN PLACE. DAMAGES DUE DIRECTLY OR INDIRECTLY TO THE CONTRACTORS OPERATIONS SHALL BE PROMPTLY REPAIRED TO THE SATISFACTION OF THE ENGINEER/ARCHITECT AND THE OWNER OF THE PROPERTY, OR SHALL MAKE PAYMENT TO SUCH OWNERS FOR REPAIRS AS MAY BECOME NECESSARY ON ACCOUNT OF DAMAGES THAT ARE DUE TO THEIR OPERATIONS.
3. THE CONTRACTOR SHALL MAKE THEMSELVES AWARE OF ALL OF THE PERMANENT AND TEMPORARY UTILITY APPURTENANCES IN THEIR PRESENT AND/OR RELOCATED POSITIONS. NO ADDITIONAL COMPENSATION WILL BE ALLOWED FOR ANY DELAYS, INCONVENIENCE, OR DAMAGE SUSTAINED DUE TO INTERFERENCE FROM THE SAID UTILITY APPURTENANCES OR THE OPERATION OF DISCONNECTING THEM, INCLUDING THE POSSIBILITY OF UNCOVERING UTILITIES THAT HAVE BEEN ABANDONED AND/OR ARE NOT INDICATED.
4. ALL DEMOLITION RUBBISH WILL BE REMOVED FROM THE SITE BY A LICENSED TRUCKING FIRM, IN COVERED TRUCKS, AND TAKEN TO A LICENSED LANDFILL. ALL THIS WILL BE PAID FOR BY THE CONTRACTOR AND WILL BE PART OF THE CONTRACTOR'S BASE BID.
5. COORDINATION WITH FIRE DEPARTMENTS AND UTILITY COMPANIES SHALL BE THE RESPONSIBILITY OF THE CONTRACTOR.
6. NO BURNING OF MATERIALS WILL BE PERMITTED.
7. THE OWNER SHALL BE GIVEN 5 BUSINESS DAYS NOTICE BEFORE ANY ENTRANCE OR ACCESS DRIVE CLOSURES.
8. CONTRACTOR SHALL COORDINATE WITH ADJACENT BUSINESS OWNER PRIOR TO ANY ENTRANCE OF ACCESS DRIVE CLOSURES.
9. THE LIMITS OF DEMOLITION SHOWN ON THE DRAWINGS ARE APPROXIMATE.
10. CONTRACTOR SHALL FIRST COORDINATE REMOVAL OF ANY EXISTING UTILITY WITH UTILITY OWNER (GAS, WATER, POWER, ETC.) ALL TELEPHONES, WATER, ELECTRIC AND GAS METERS, AND ASSOCIATED EQUIPMENT SHALL REMAIN THE PROPERTY OF THE VARIOUS UTILITY COMPANIES.
11. EXISTING PAVEMENT SHALL BE SAW-CUT AT LOCATIONS INDICATED AS REQUIRED FOR PAVEMENT REMOVAL. THE SAW-CUT SHALL BE MADE TO THE FULL DEPTH OF THE PAVEMENT.
12. WHERE INDICATED THE EXISTING PAVEMENT SHALL BE REMOVED AND LEGALLY DISPOSED OF OFF THE PROJECT SITE. CONTRACTOR SHALL NOT USE A HEAVY BALL FOR BREAKING UP OF EXISTING PAVEMENT OVER PUBLIC WATER AND GAS MAINS.
13. TRENCH BACKFILL AND ANY SUBGRADE SOILS DISTURBED BY THE PAVEMENT REMOVAL PROCESS SHALL BE RECOMPACTED AS SPECIFIED IN THE COMPACTION REQUIREMENTS TABLE OR AS DIRECTED BY THE GEOTECHNICAL ENGINEER.
14. NO TREES SHALL BE REMOVED BETWEEN JUNE 1 AND JULY 31 IN ACCORDANCE WITH FISH AND WILDLIFE'S RULING ON THE PROTECTION OF THE ENDANGERED LONG-EARED BAT.
15. ANY TREES, BUSHES, OR OTHER VEGETATION WITH THE POTENTIAL TO BE NESTING HABITAT TO BE REMOVED DURING THE PRIMARY MIGRATORY BIRD NESTING SEASON (APRIL 1 THROUGH SEPTEMBER 1) REQUIRE A MIGRATORY BIRD SURVEY PRIOR TO REMOVAL. CONTRACTOR SHALL CONDUCT THE SURVEY AND THEIR OPERATIONS IN ACCORDANCE WITH THE RECOMMENDATIONS SET FORTH IN THE NEBRASKA DEPARTMENT OF TRANSPORTATION'S AVIAN PROTECTION PLAN. MIGRATORY BIRD SURVEYS SHALL BE PAID FOR BY THE CONTRACTOR AT NO ADDITIONAL COST TO THE OWNER. IF THE CONTRACTOR ELECTS TO REMOVE HABITAT DURING THE NESTING SEASON, THE CONTRACTOR SHALL PROVIDE A COPY OF THE COMPLETED BIRD SURVEY TO THE ENGINEER.

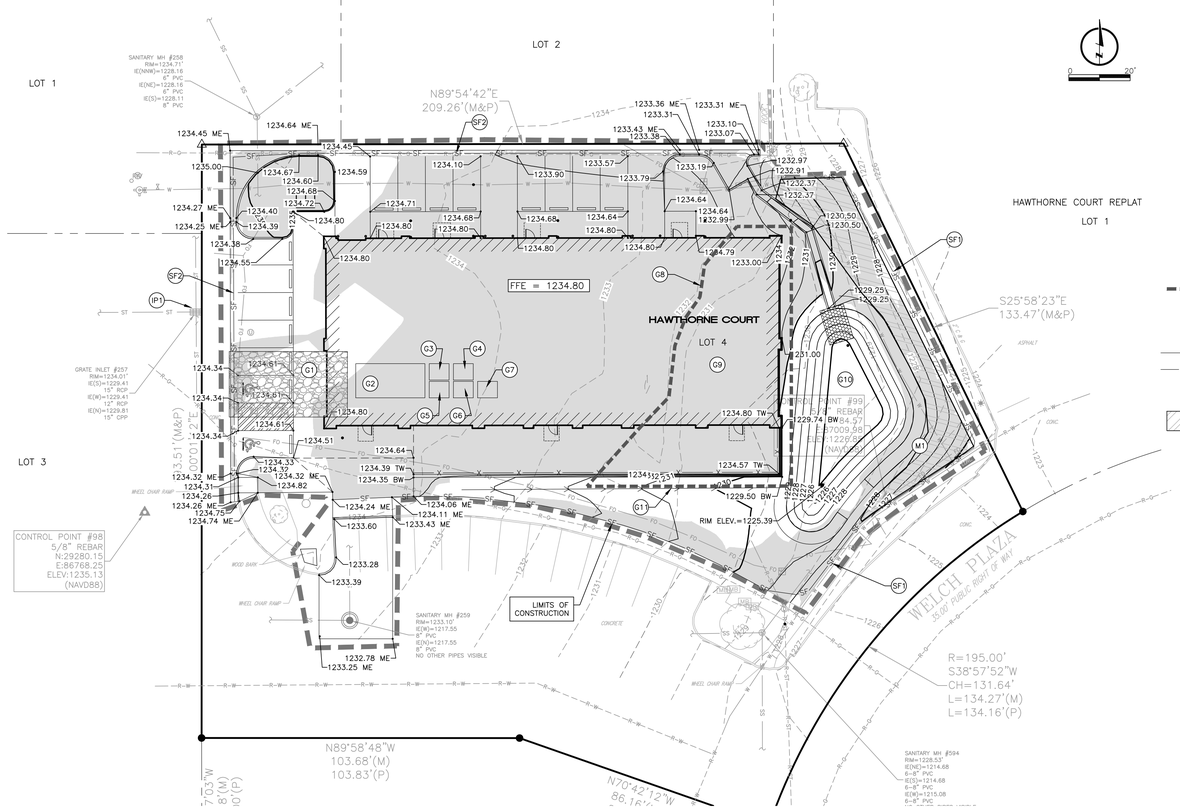

2 GRADING PLAN

(G) STORMWATER POLLUTION PREVENTION KEYNOTES

NOTE: ALL SWPPP-RELATED MEASURES AND BMPS SHALL BE MAINTAINED THROUGHOUT CONSTRUCTION AND SHALL BE THE RESPONSIBILITY OF THE CONTRACTOR. BMPS MUST REMAIN IN PLACE UNTIL THE PROJECT SITE IS FULLY STABILIZED OR AS DIRECTED BY THE EROSION CONTROL INSPECTOR. ALTERNATE LOCATIONS OF SWPPP-RELATED MEASURES SHALL BE COORDINATED WITH THE EROSION CONTROL INSPECTOR.

- G1 CONSTRUCT CONSTRUCTION ENTRANCE IN ACCORDANCE WITH CITY OF OMAHA STANDARD PLATE 101-04.
- G2 CONSTRUCT STABILIZED VEHICLE AND EQUIPMENT PARKING AREA
- G3 CONSTRUCT SANITARY WASTE RECEPTACLE PER STANDARD SPECIFICATION 9.6.2 OF THE OMAHA REGIONAL STORMWATER DESIGN MANUAL.
- G4 CONSTRUCT SOLID WASTE RECEPTACLE PER STANDARD SPECIFICATION 9.6.3 OF THE OMAHA REGIONAL STORMWATER DESIGN MANUAL.
- G5 CONSTRUCT DESIGNATED MATERIAL DELIVERY AND STORAGE AREA PER STANDARD SPECIFICATION 9.6.4 OF THE OMAHA REGIONAL STORMWATER DESIGN MANUAL.
- G6 CONSTRUCT DESIGNATED VEHICLE AND EQUIPMENT FUELING AREA PER STANDARD SPECIFICATION 9.6.6 OF THE OMAHA REGIONAL STORMWATER DESIGN MANUAL.
- G7 CONSTRUCT CONCRETE WASHOUT IN ACCORDANCE WITH CITY OF OMAHA STANDARD PLATE 101-06.
- G8 INSTALL 3-FEET THICK SURCHARGE OVER BUILDING AND PATIO AREAS AS RECOMMENDED IN THE GEOTECHNICAL REPORT. SURCHARGE SHALL EXTEND 3 FEET BEYOND THE BUILDING AND PATIO FOOTPRINT AND SHALL BE IN PLACE UNTIL DIRECTED BY THE GEOTECHNICAL ENGINEER.
- G9 INSTALL SETTLEMENT PLATE AS DIRECTED BY THE GEOTECHNICAL ENGINEER PRIOR TO PLACING SURCHARGE.
- G10 POST CONSTRUCTION BIORETENTION GARDEN. CONTRACTOR SHALL NOT CONSTRUCT POST CONSTRUCTION BMP UNTIL SITE HAS REACHED FINAL STABILIZATION AND AT THE DIRECTION OF THE ENGINEER. SEE SHEET C6.0 FOR BIORETENTION GARDEN INFORMATION.
- G11 GRADE INTERCEPTOR SWALE TOWARDS THE BIORETENTION POND.
- SF1-SF2 CONSTRUCT SILT FENCE IN ACCORDANCE WITH CITY OF OMAHA STANDARD PLATE 101-02.
- IP1 CONSTRUCT INLET PROTECTION IN ACCORDANCE WITH CITY OF OMAHA STANDARD PLATE 101-03.
- M1 CONSTRUCT EROSION PREVENTION BLANKET PER STANDARD SPECIFICATION 9.5.23 OF THE OMAHA REGIONAL STORMWATER DESIGN MANUAL. BLANKET SHALL BE NORTH AMERICAN GREEN SC150 OR APPROVED EQUIVALENT.

SEGMENTAL WALL NOTES

1. THE SEGMENTAL RETAINING WALL SHALL BE CONSTRUCTED IN ACCORDANCE WITH SECTION 605 OF THE CITY OF OMAHA STANDARD SPECIFICATIONS FOR PUBLIC WORKS CONSTRUCTION CURRENT EDITION AND IN ACCORDANCE WITH THE NCMA DESIGN MANUAL.
2. CONTRACTOR SHALL PROVIDE RETAINING WALL DESIGN BY A PROFESSIONAL ENGINEER REGISTERED IN NEBRASKA PER MANUFACTURER'S RECOMMENDATIONS.
3. THE APPROVED SEGMENTAL BLOCK UNITS ARE: ANCHOR VERTICA PRO, KEYSTONE STANDARD UNIT 21, AND ROCKWOOD LEGEND. BLOCKS MUST BE A MINIMUM UNIT WEIGHT OF 95 LBS. SHORT TAIL BLOCKS WILL NOT BE AN APPROVED SUBSTITUTE.
4. BLOCK FACE AND COLOR SHALL BE COORDINATED WITH PROPERTY OWNER AND ENGINEER.
5. IN ADDITION TO THE PROJECT SPECIFICATIONS, FOLLOW APPLICABLE PROVISIONS OF THE MANUFACTURERS INSTALLATION INSTRUCTIONS AND WRITTEN SPECIFICATIONS.
6. IF CONDITIONS ARE DIFFERENT THAN THOSE STATED IN THESE DRAWINGS AND SPECIFICATIONS, THE CONTRACTOR MUST CONTACT THE ENGINEER PRIOR TO PROCEEDING WITH THE CONSTRUCTION OF THE WALL.
7. SOIL PARAMETERS USED FOR THE DESIGN OF THE WALL SHALL BE AS DETERMINED BY THE GEOTECHNICAL ENGINEER. SEE COMPACTION TABLE ON GRADING PLAN FOR GEOTECHNICAL ENGINEER CONTACT INFORMATION.
8. THE STRUCTURE'S DESIGN HEIGHT SHALL BE MEASURED FROM THE TOP OF THE LEVELING PAD TO THE TOP OF THE WALL.
9. WALL ALIGNMENTS ARE SHOWN FOR A SINGLE ELEVATION OF WALL. WHERE LEVELING PAD ELEVATION RAISES OR LOWERS, THE ALIGNMENT SHALL BE MOVED IN OR OUT DUE TO WALL BATTER.
10. SECTION 1013, GUARDS OF THE 2006 UNIFORM BUILDING CODE REQUIRES THAT "GUARDS SHALL BE REQUIRED ALONG OPEN-SIDED WALKING SURFACES, MEZZANINES, INDUSTRIAL EQUIPMENT PLATFORMS, STAIRWAYS, RAMPS AND LANDINGS THAT ARE LOCATED MORE THAN 30 INCHES ABOVE THE FLOOR OR GRADE BELOW. GUARDS SHALL FORM A PROTECTIVE BARRIER NOT LESS THAN 42 INCHES HIGH, MEASURED VERTICALLY ABOVE THE LEADING EDGE OF THE TREAD, ADJACENT WALKING SURFACE OR ADJACENT SEATBOARD."
11. CONTRACTOR SHALL COORDINATE WITH THE OWNER, ARCHITECT AND ENGINEER TO DETERMINE IF BARRIERS ARE REQUIRED FOR WALL SECTIONS WITH AN EXPOSED HEIGHT GREATER THAN 30 INCHES.
12. LAMP RYNEARSON RECOMMENDS THAT THE OWNER/ARCHITECT HIRE A GEOTECHNICAL ENGINEER TO PERFORM ANY REQUIRED ON-SITE MATERIALS TESTING OR CONSTRUCTION OBSERVATION. LAMP RYNEARSON WILL NOT BE RESPONSIBLE FOR PROVIDING THESE SERVICES.
13. LAMP RYNEARSON WILL NOT REVIEW SHOP DRAWINGS FOR MODULAR BLOCK RETAINING WALLS. IF THE OWNER REQUIRES THIS REVIEW, LAMP RYNEARSON RECOMMENDS THE OWNER/ARCHITECT HIRE A GEOTECHNICAL ENGINEER TO PERFORM THIS SERVICE.
14. CONTRACTOR TO COORDINATE WITH OWNER ON EXACT WALL TYPE, BUT IF SEGMENTAL WALL IS SELECTED IT SHALL CONFORM TO THESE REQUIREMENTS.

ELEVATION NOTES

1. PROPOSED CONTOURS ARE FINISHED GRADE/TOP OF PAVEMENT ELEVATIONS. NOT SUBGRADE ELEVATIONS.
2. ALL SPOT ELEVATIONS IN PAVEMENT ARE TOP OF SLAB UNLESS NOTED OTHERWISE.

COMPACTION REQUIREMENTS TABLE

SEE GEOTECHNICAL ENGINEERING REPORT:	HAWTHORNE COURT FLEX BUILDING		
PREPARED BY:	THIELE GEOTECH INC.		
ENGINEER:	HEATHER CUTLER		
PROJECT NO:	20530.00		
DATED:	12-26-2020		
MAX. DEPTH OF LIFT FOR FILL (MEASURED LOOSE)	8"		
AREA	TEST	COMPACTION	MOISTURE
UTILITY TRENCH BACKFILL (DEPTH < 5')	STANDARD PROCTOR	95%	-3/+4
UTILITY TRENCH BACKFILL (DEPTH > 5')	STANDARD PROCTOR	95%	-3/+4
PCC PAVEMENT SUBGRADE (UPPER 12")	MODIFIED PROCTOR	90%	-3/+4
ACC PAVEMENT SUBGRADE (UPPER 12")	MODIFIED PROCTOR	90%	-3/+4
PAVEMENT SUBGRADE (DEPTH > 12")	STANDARD PROCTOR	95%	-3/+4
MANHOLE + STRUCTURE BACKFILL (FULL DEPTH)	STANDARD PROCTOR	95%	-3/+4
SIDEWALK SUBGRADE (UPPER 6")	STANDARD PROCTOR	95%	-3/+4
ALL OTHER FILL	STANDARD PROCTOR	95%	-3/+4

NOTES:

1. STANDARD PROCTOR SHALL BE DETERMINED IN ACCORDANCE WITH ASTM D 698.
2. MODIFIED PROCTOR SHALL BE DETERMINED IN ACCORDANCE WITH ASTM D 1557.

EROSION CONTROL SUMMARY TABLE

TOTAL AREA OF SITE	1.07 AC.
DISTURBED AREA	0.63 AC.
EROSION CONTROL MEASURES:	SILT FENCE, ROCK ACCESS ROAD, INLET PROTECTION, AND SEEDING

LAMP RYNEARSON
LAMPRYNEARSON.COM
OMAHA, NEBRASKA
14710 W. DODGE RD. STE. 100 (402) 496.2498
NE AUTHORIZATION NO.: CA0135
FORT COLLINS, COLORADO
4715 INNOVATION DR., STE. 100 (970) 226.0342
KANSAS CITY, MISSOURI
9001 STATE LINE RD., STE. 200 (816) 361.0440
MO AUTH. NO.: E-2013011903 | LS-2019043127

PROFESSIONAL CIVIL ENGINEER
BRENDAN C. FINDALL
E-20023
10/16/2024
STATE OF NEBRASKA

BRENDAN FINDALL
E-20023

REMOVAL AND GRADING PLAN

WELCH PLAZA – SITE PLAN
DOUGLAS COUNTY, NEBRASKA

811 Know what's below. Call before you dig.

ALL UTILITIES ARE SHOWN BASED ON THE INFORMATION OBTAINED FROM RECORDS. THERE IS NO GUARANTEE ALL FACILITIES ARE SHOWN OR THAT THE LOCATIONS SHOWN ARE THE SIZE OF EACH FACILITY IS CORRECT. THE CONTRACTOR IS RESPONSIBLE FOR LOCATING ALL STRUCTURE AND UTILITIES PRIOR TO CONSTRUCTION.

REVISIONS

DESIGNER / DRAFTER
RICK KELLER
DATE
10-18-2024
PROJECT NUMBER
0120156.01-020/320
BOOK AND PAGE

SHEET
C4.0

L:\Engineering\0120156 178222 Welch Plaza Flex Space Site Plan\DRAWINGS\CONSTRUCTION DRAWINGS\0120156-SITE-C0.dwg, 10/18/2024 11:11:36 PM, BRENDAN FINDALL, LAMP RYNEARSON

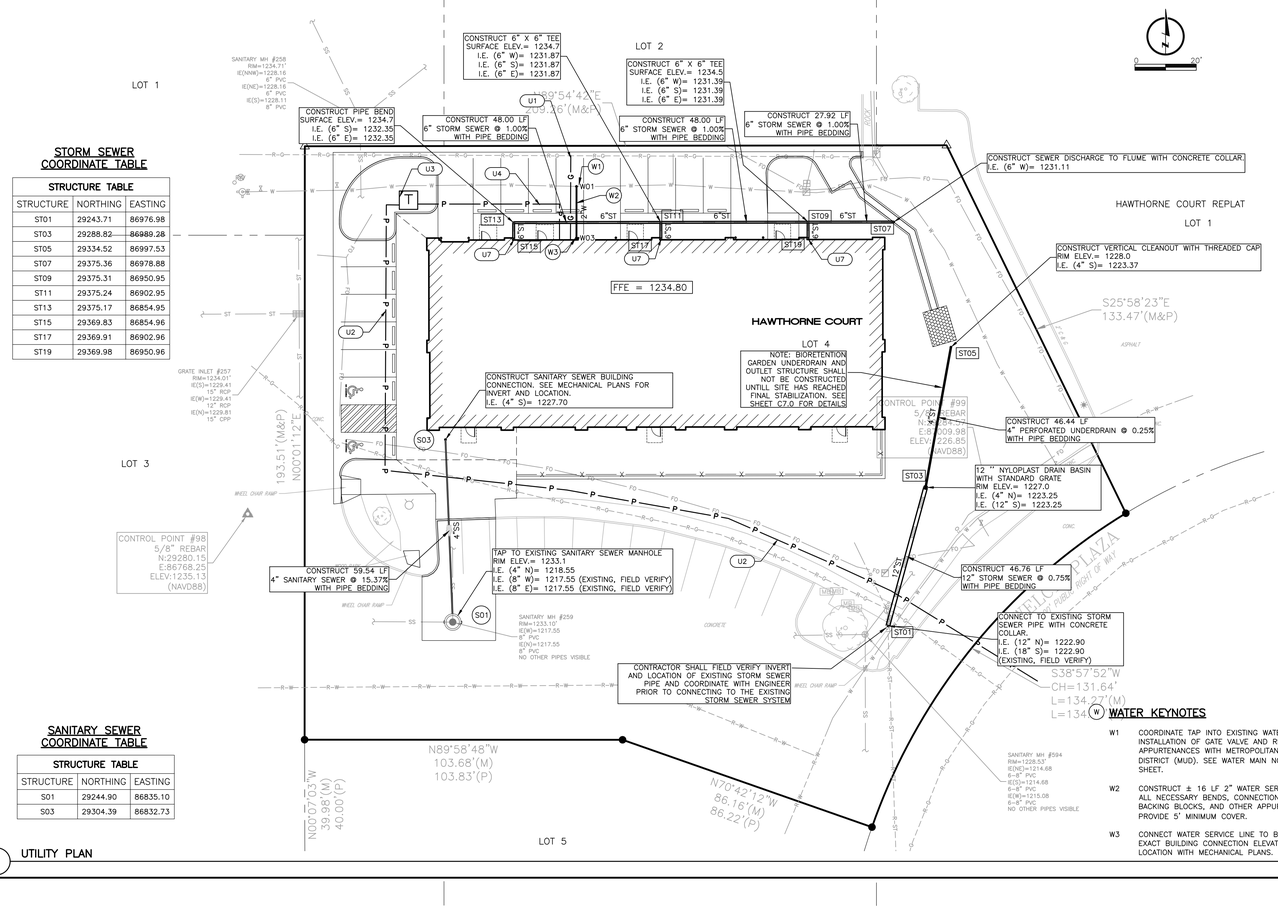

1 UTILITY PLAN

STORM SEWER COORDINATE TABLE

STRUCTURE TABLE		
STRUCTURE	NORTHING	EASTING
ST01	29243.71	86976.98
ST03	29288.82	86989.28
ST05	29334.52	86997.53
ST07	29375.36	86978.88
ST09	29375.31	86950.95
ST11	29375.24	86902.95
ST13	29375.17	86854.95
ST15	29369.83	86854.96
ST17	29369.91	86902.96
ST19	29369.98	86950.96

SANITARY SEWER COORDINATE TABLE

STRUCTURE TABLE		
STRUCTURE	NORTHING	EASTING
S01	29244.90	86835.10
S03	29304.39	86832.73

UTILITY CONTACTS

SANITARY SEWER:	CITY OF OMAHA SEWER MAINTENANCE	402–444–5220
POWER:	OPPD NATE GASKILL	531–226–5835 (OFFICE) 402–990–1801 (CELL)
	JEREMY CASON	531–226–5846 (OFFICE) 712–301–4228 (CELL)
TELEPHONE:	CENTURY LINK BUSINESS MARKETS GROUP	800–777–9594
CABLE TV:	COX BUSINESS SERVICES	402–934–6000
WATER:	CONTRACTOR SERVICES MUD	402–504–7014
GAS:	CONTRACTOR SERVICES MUD	402–504–7014

(U) UTILITY KEYNOTES

U1. CONTRACTOR TO COORDINATE GAS SERVICE WITH MUD. SEE MECHANICAL PLANS FOR CONNECTION TO BUILDING.

U2. CONTRACTOR TO COORDINATE ELECTRICAL SERVICE WITH OPPD. SEE ELECTRICAL PLANS FOR MORE INFORMATION.

U3. TRANSFORMER. SEE ELECTRICAL PLANS FOR MORE INFORMATION.

U4. ELECTRICAL CONNECTION TO THE BUILDING. SEE ELECTRICAL PLANS FOR MORE INFORMATION.

U5. ADJUST EXISTING UTILITY PEDESTAL TO GRADE. CONTRACTOR SHALL COORDINATE WITH UTILITY COMPANY.

U6. RELOCATED UTILITY PEDESTAL LOCATION. CONTRACTOR SHALL COORDINATE WITH UTILITY COMPANY.

U7. CONSTRUCT ROOF DOWNSPOUTS CONNECTION, SEE DETAIL ON SHEET C6.0. CONNECT TO STORM SEWER MAIN AT 1% MIN. SLOPE

POWER NOTES

1. THE CONTRACTOR SHALL CONSTRUCT CONCRETE TRANSFORMER PAD AND PRIMARY CONDUIT PER THE OMAHA PUBLIC POWER DISTRICT GENERAL WIRING AND METERING SPECIFICATIONS.

GAS SERVICE NOTES

1. GAS SERVICE WILL BE CONSTRUCTED FROM THE EXISTING SERVICE TO BUILDING BY M.U.D.
2. M.U.D. WILL PROVIDE THE METER.
3. INTERIOR GAS LINE AND APPURTENANCES SHALL BE AIR TESTED IN THE PRESENCE OF AN M.U.D. OFFICIAL. CALL M.U.D. CUSTOMER SERVICE (402) 554–6666 TO SET AN APPOINTMENT.

TELEPHONE SERVICE NOTES

1. COORDINATE WITH OWNER AND LUMEN TO PROVIDE COMMUNICATION LINES AS REQUIRED.

CABLE TV

1. COORDINATE WITH OWNER AND COX COMMUNICATIONS TO PROVIDE SERVICE AS REQUIRED.

(W) WATER KEYNOTES

W1 COORDINATE TAP INTO EXISTING WATER MAIN AND INSTALLATION OF GATE VALVE AND RELATED APPURTENANCES WITH METROPOLITAN UTILITIES DISTRICT (MUD). SEE WATER MAIN NOTES, THIS SHEET.

W2 CONSTRUCT ± 16 LF 2" WATER SERVICE LINE WITH ALL NECESSARY BENDS, CONNECTIONS, CONCRETE BACKING BLOCKS, AND OTHER APPURTENANCES. PROVIDE 5' MINIMUM COVER.

W3 CONNECT WATER SERVICE LINE TO BUILDING. VERIFY EXACT BUILDING CONNECTION ELEVATION AND LOCATION WITH MECHANICAL PLANS.

SANITARY SEWER NOTES – PRIVATE

1. MANHOLES SHALL BE LOCATED IN ACCORDANCE WITH THE COORDINATES SHOWN. THE LENGTH OF PIPE BETWEEN MANHOLES MAY VARY ACCORDINGLY.
2. THE CONTRACTOR IS REFERRED TO THE FOLLOWING CITY OF OMAHA STANDARD PLATES:
   - 700–02 SEWER TAP
   - 701–01 SEWER BEDDING
   - 703–03 SANITARY SEWER MANHOLE
   - 703–04 SANITARY SEWER CLEAN–OUT
3. MANHOLES SHALL INCLUDE A 4" AND AN 8" ADJUSTING RING AT THE TOP OF THE RISER SECTION. RISER SECTIONS BELOW THE ADJUSTING RINGS SHALL BE AS NECESSARY TO COMPLETE THE MANHOLE.
4. THE CONTRACTOR SHALL PERFORM AIR OR WATER LEAKAGE TESTS IN ACCORDANCE WITH CITY OF OMAHA SPECIFICATIONS.
5. TRENCH BACKFILL SHALL BE COMPACTED AS SHOWN IN THE COMPACTION REQUIREMENTS TABLE (SEE SHEET C4.0), OR AS SPECIFIED BY THE GEOTECHNICAL ENGINEER.
6. CONCRETE FOR MANHOLES AND PIPE SHALL BE OPW 4000 USING TYPE II PORTLAND CEMENT. THE CEMENT FOR MANHOLE GROUT SHALL BE THE SAME AS THAT FOR MANHOLE CONCRETE AND SHALL MEET THE REQUIREMENTS OF THE CITY OF OMAHA STANDARD SPECIFICATIONS FOR PUBLIC WORKS CONSTRUCTION.
7. ALL PIPES SHALL BE BEDDED IN ACCORDANCE WITH THE CITY OF OMAHA STANDARD PLATE 701–01.
8. ALL SANITARY SEWER SERVICE CONNECTIONS MUST BE MADE BY A LICENSED PLUMBER.
9. THE CONTRACTOR INSTALLING SEWER SHALL HOLD A VALID SEWER LAYER'S LICENSE AND SHALL OBTAIN ALL REQUIRED PERMITS. PERMITTING FEES SHALL BE PAID BY THE CONTRACTOR AT NO ADDITIONAL COST TO THE OWNER.

STORM SEWER NOTES – PRIVATE

1. INLETS AND MANHOLES SHALL BE LOCATED IN ACCORDANCE WITH THE COORDINATES SHOWN. THE LENGTHS OF PIPES MAY VARY ACCORDINGLY.
2. THE CONTRACTOR IS REFERRED TO THE FOLLOWING CITY OF OMAHA STANDARD PLATES:
   - 700–01 CONCRETE COLLAR AND CRADLE
   - 700–02 SEWER TAP
   - 700–04 REINFORCED CONCRETE PIPE COUPLERS
   - 701–01 SEWER BEDDING
   - 702–11 STORM SEWER MANHOLE
3. TRENCH BACKFILL SHALL BE COMPACTED AS SHOWN IN THE COMPACTION REQUIREMENTS TABLE (SEE SHEET C4.0), OR AS SPECIFIED BY THE GEOTECHNICAL ENGINEER.
4. ALL PIPE SHALL BE BEDDED IN ACCORDANCE WITH CITY OF OMAHA STANDARD PLATE 701–01.
5. STORM SEWER MATERIALS: THE FOLLOWING MATERIALS ARE GENERALLY APPROVED FOR STORM SEWER CONSTRUCTION:
   - A. REINFORCED CONCRETE PIPE (RCP). RCP SHALL BE CLASS III WALL B OR C AND SHALL CONFORM TO THE REQUIREMENTS OF ASTM C76–03 AND SHALL BE INSTALLED AS REQUIRED BY ASTM C1479–01. ALL REINFORCED CONCRETE PIPE JOINTS SHALL BE INSTALLED USING RUBBER GASKETS IN ACCORDANCE WITH ASTM C443, STANDARD SPECIFICATIONS FOR JOINTS FOR CONCRETE PIPE AND MANHOLES, USING RUBBER GASKETS.
   - B. DUCTILE IRON PIPE (DIP). DIP SHALL CONFORM TO THE REQUIREMENTS OF ASTM A746–09 AND SHALL BE INSTALLED AS REQUIRED BY ASTM C800–08.
   - C. POLYVINYL CHLORIDE (PVC) PLASTIC DRAIN, WASTE AND VENT PIPE. PVC PIPE SHALL BE TYPE 1, GRADE 1 AND SHALL CONFORM TO THE REQUIREMENTS OF ASTM D2665–02AED AND SHALL BE INSTALLED AS REQUIRED BY ASTM D2321–00.
   - D. HIGH DENSITY POLYETHYLENE (HDPE) PIPE. HDPE PIPE SHALL HAVE A CORRUGATED EXTERIOR AND A SMOOTH INTERIOR AND SHALL CONFORM TO THE REQUIREMENTS OF AASHTO M–294 TYPE S AND SHALL BE INSTALLED AS REQUIRED BY ASTM D2321–00 AND THE MANUFACTURERS INSTALLATION INSTRUCTIONS. HDPE PIPE SHALL BE MANUFACTURED FROM HDPE VIRGIN COMPOUNDS AND SHALL CONFORM TO THE REQUIREMENTS OF ASTM D–3350 FOR THE CELL CLASSIFICATION 335420C. COUPLING BANDS SHALL MEET THE SOIL TIGHTNESS REQUIREMENTS OF AASHTO SECTION 26.4.2.4.
8. CONCRETE FOR STORM SEWER STRUCTURES SHALL BE OPW 4000 USING TYPE II PORTLAND CEMENT. THE CEMENT FOR MANHOLE GROUT SHALL BE THE SAME AS THAT FOR MANHOLE CONCRETE AND SHALL MEET THE REQUIREMENTS OF THE CITY OF OMAHA STANDARD SPECIFICATIONS FOR PUBLIC WORKS CONSTRUCTION.
9. ALL STORM SEWER CONSTRUCTED IN THE PUBLIC RIGHT OF WAY SHALL BE REINFORCED CONCRETE PIPE (RCP).
10. THE CONTRACTOR INSTALLING SEWER SHALL HOLD A VALID SEWER LAYER'S LICENSE AND SHALL OBTAIN ALL REQUIRED PERMITS. PERMITTING FEES SHALL BE PAID BY THE CONTRACTOR AT NO ADDITIONAL COST TO THE OWNER.

(W) WATER MAIN NOTES

1. THE CONTRACTOR SHALL CONSTRUCT WATER SERVICE FROM EXISTING MAINS TO THE BUILDING. CONTRACTOR SHALL VERIFY BUILDING CONNECTION LOCATIONS IN ARCHITECTURAL PLANS.
2. THE CONTRACTOR SHALL PROVIDE VALVE BOX AND WATER METER.
3. CALL M.U.D. BUILDER AND CONTRACTOR SERVICES (402) 554–7987 FOR FURTHER DETAILS.
4. ALL WATER LINES SHALL HAVE 5' MINIMUM COVER.
5. CONSTRUCT WATER SERVICE PER M.U.D. SPECIFICATIONS.
6. ALL WATER LINES SHALL MEET THE REQUIREMENTS OF THE OMAHA MUNICIPAL CODE SECTION 49–1518. WATER SERVICE.
7. ALL WATER SERVICE MUST BE INSTALLED BY A LICENSED PLUMBER.
8. CONTRACTOR WILL COORDINATE WITH OWNER PRIOR TO HIS BID TO DETERMINE WHO PAYS TAPPING FEES, COST OF WATER METER, COST OF ASSOCIATED PERMITS, AND CAPITAL FACILITIES CHARGE.
9. ALL WATER SERVICE LINES AND CONNECTIONS SHALL BE CONSTRUCTED IN ACCORDANCE WITH THE METROPOLITAN UTILITIES DISTRICT (M.U.D.) WATER RULES AND REGULATIONS.

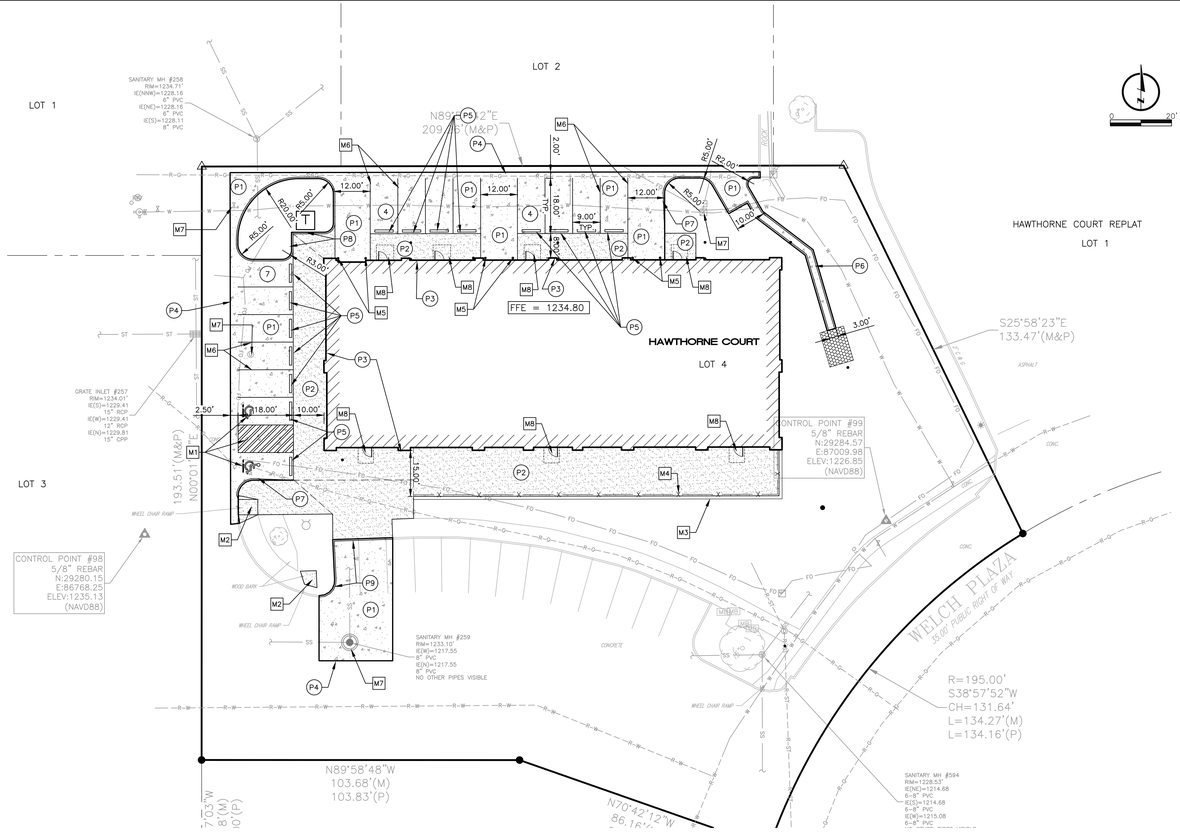

2 PAVING PLAN

(P) PAVING KEYNOTES

P1 CONSTRUCT 7" THICK PC CONCRETE PAVEMENT WITH INTEGRAL CURB AND GUTTER.

P2 CONSTRUCT 5" THICK PC CONCRETE SIDEWALK.

P3. INSTALL 1/2" EXPANSION JOINT WITH COLOR MATCHED SEALANT WHEN SIDEWALK IS ADJACENT TO THE BUILDING/PARKING LOT CURB.

P4. DRILL AND EPOXY #5 X 18" EPOXY COATED TIE BARS AT 36" CENTERS TO EXISTING PAVEMENT.

P5. CONSTRUCT PRECAST CONCRETE WHEEL STOP. SEE DETAIL, SHEET C6.0

P6. CONSTRUCT COCRETE FLUME TO BIORETENTION GARDEN. SEE DETAIL, SHEET C6.0.

P7. CONSTRUCT CURB TAPER FROM 6" TYPE A CURB TO 0" CURB.

P8. CONSTRUCT TYPE A CURB INTEGRAL TO SIDEWALK.

P9. CONSTRUCT TYPE B INTEGRAL CURB

(M) MISCELLANEOUS KEYNOTES

M1. CONSTRUCT ACCESSIBLE STRIPING AND SIGNAGE. SEE DETAIL, SHEET C6.0.

M2. CONSTRUCT CURB RAMP PER CITY OF OMAHA STANDARD PLATE 504–01.

M3. CONSTRUCT RETAINING WALL. SEE SHEET C4.0 FOR ELEVATION. COORDINATE WALL TYPE AND MATERIAL WITH OWNER.

M4. CONSTRUCT GUARD CONFORMING TO UNIFORM BUILDING CODE REQUIREMENTS.

M5. CONSTRUCT BOLLARD, SEE ARCHITECTURAL.

M6. CONSTRUCT PERMANENT PAINT MARKING – 4" YELLOW, TYPICAL.

M7. ADJUST UTILITY TO GRADE.

M8. CONSTRUCT STRUCTURAL STOOP. SEE ARCHITECTURAL PLANS FOR DETAILS.

PORTLAND CEMENT CONCRETE (PCC) PAVING NOTES – PRIVATE

1. ALL PAVING ELEVATIONS ARE AT TOP OF SLAB UNLESS NOTED OTHERWISE.
2. CURBS SHALL BE TYPE "A" IN ACCORDANCE WITH CITY OF OMAHA STANDARD PLATE 502–01 UNLESS NOTED OTHERWISE.
3. PAVEMENT SUBGRADE TO A DEPTH OF 12 INCHES AND TO A WIDTH OF 4 FEET OUTSIDE PAVEMENT EDGES SHALL BE COMPACTED AS SPECIFIED IN THE COMPACTION REQUIREMENTS TABLE (SEE SHEET C4.0).
4. BACKFILL BEHIND CURBS SHALL BE COMPACTED TO A MINIMUM IN–PLACE DENSITY OF 95% OF "MAXIMUM DENSITY" AS DETERMINED IN ACCORDANCE WITH ASTM D 1557 (95% MODIFIED PROCTOR).
5. THE CONTRACTOR SHALL CONTACT THE SOILS ENGINEER TO OBSERVE THE SUBGRADE PRIOR TO PLACING PAVEMENT TO DELINEATE ANY AREAS WHERE SUBGRADE OVEREXCAVATION MAY BE REQUIRED.
6. THE CONTRACTOR IS REFERRED TO THE FOLLOWING CITY OF OMAHA STANDARD PLATES:
   - 501–01 CONCRETE PAVEMENT JOINTS
   - 502–01 CONCRETE CURBS
   - 504–01 CONCRETE CURB RAMPS
7. CONCRETE SHALL BE IN ACCORDANCE WITH CITY OF OMAHA STANDARD SPECIFICATIONS FOR PUBLIC WORKS CONSTRUCTION 2024, SECTION 500. UNLESS NOTED OTHERWISE, ALL CONCRETE SHALL BE OPW 3500.
8. CONCRETE PAVEMENT SHALL BE CURED USING A LIQUID–MEMBRANE FORMING COMPOUND AT THE CONCENTRATIONS AND APPLICATION RATES RECOMMENDED BY THE MANUFACTURER.
9. WATER–REDUCING ADMIXTURE SHALL BE ADDED TO ALL HAND–PLACED AND FINISHED CONCRETE.
10. JOINT PATTERNS
    - A. THE MAXIMUM PANEL DIMENSION IN FEET IS EQUAL TO THE LESSER OF TWICE THE PAVEMENT THICKNESS IN INCHES OR FIFTEEN FEET.
    - B. THE RATIO OF PANEL LENGTH TO WIDTH SHOULD NOT EXCEED 1.25:1.
    - C. THE OUTER PARKING LOT JOINT SHALL BE REINFORCED TO FORM A RING
    - D. THE CONTRACTOR SHALL SUBMIT JOINT PATTERN SHOP DRAWINGS TO THE ENGINEER FOR APPROVAL PRIOR TO PAVING.

SIDEWALK NOTES – PRIVATE

1. SIDEWALK SUBGRADE TO A DEPTH OF 6 INCHES AND TO A WIDTH OF 6 INCHES OUTSIDE OF SIDEWALK EDGES SHALL BE COMPACTED AS SPECIFIED IN THE COMPACTION REQUIREMENTS TABLE. (SEE SHEET C4.0)
2. BACKFILL SHALL BE COMPACTED AS SPECIFIED IN THE COMPACTION REQUIREMENTS TABLE. (SEE SHEET C4.0)
3. THE CONTRACTOR IS REFERRED TO THE FOLLOWING CITY OF OMAHA STANDARD PLATES:
   - 503–01 SIDEWALK CONSTRUCTION
   - 504–01 CONCRETE CURB RAMPS
5. CONCRETE SHALL BE IN ACCORDANCE WITH CITY OF OMAHA STANDARD SPECIFICATIONS FOR PUBLIC WORKS CONSTRUCTION, SECTION 500. UNLESS OTHERWISE NOTED, ALL CONCRETE SHALL BE OPW 3500.
6. CONCRETE PAVEMENT SHALL BE CURED USING A LIQUID–MEMBRANE FORMING COMPOUND AT THE CONCENTRATIONS AND APPLICATION RATES RECOMMENDED BY THE MANUFACTURER.
7. WATER–REDUCING ADMIXTURE SHALL BE ADDED TO ALL HAND–PLACED AND FINISHED CONCRETE.
8. JOINT SEALANT SHALL MEET THE REQUIREMENTS OF SECTION 500.02 (G) OF THE CITY OF OMAHA STANDARD SPECIFICATIONS FOR PUBLIC WORKS CONSTRUCTION EXPECT AS MODIFIED HEREIN. BITUMASTIC JOINT SEALER IS NOT ALLOWED. POLYURETHANE OR SILICONE JOINT SEALER SHALL COLOR–MATCH THE NEW PCC PAVEMENT. SUBMIT COLOR SAMPLES TO THE OWNER FOR HIS APPROVAL PRIOR TO APPLICATION.

LAMP RYNEARSON
LAMPRYNEARSON.COM
OMAHA, NEBRASKA
14710 W. DODGE RD., STE. 100 (402) 496.2498
NE AUTHORIZATION NO.: CA0135
FORT COLLINS, COLORADO
4715 INNOVATION DR., STE. 100 (970) 226.0342
KANSAS CITY, MISSOURI
9001 STATE LINE RD., STE. 200 (816) 861.0440
MO AUTH. NO.: E-2013011903 | LS-2019043127

PROFESSIONAL CIVIL ENGINEER BRENDAN C. FINDALL E-20023 10/18/2024 STATE OF NEBRASKA

BRENDAN FINDALL
E-20023

PAVING AND UTILITY PLAN

WELCH PLAZA – SITE PLAN
DOUGLAS COUNTY, NEBRASKA

811 Know what's below. Call before you dig.

ALL UTILITIES ARE SHOWN BASED ON THE INFORMATION AVAILABLE TO THE ENGINEER. THE EXACT LOCATION OF UTILITY FACILITIES ARE SHOWN FOR THAT THE LOCATION, DEPTH, AND SIZE OF EACH FACILITY IS ACCURATELY DETERMINED. OWNER IS RESPONSIBLE FOR LOCATING ALL UTILITIES AND SERVICE LINES PRIOR TO CONSTRUCTION.

REVISIONS

DESIGNER / DRAFTER: RICK KELLER
DATE: 10–18–2024
PROJECT NUMBER: 0120156.01–020/320
BOOK AND PAGE:

SHEET: C5.0

L:\Engineering\0120156 17822 Welch Plaza Pkw Spot Site Plan\DRAWINGS\CONSTRUCTION DRAWINGS\0120156-SITE-C5.dwg, 10/18/2024 11:14:42 PM, BRENDAN FINDALL, LAMP RYNEARSON

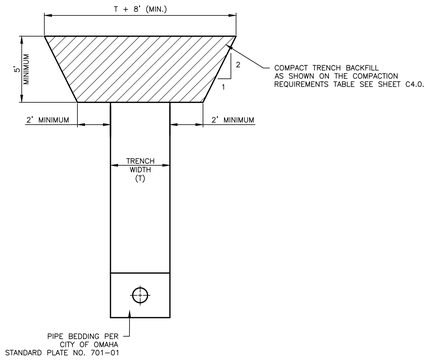

1 / C6.0 TRENCH BACKFILL DETAIL
SCALE: NOT TO SCALE

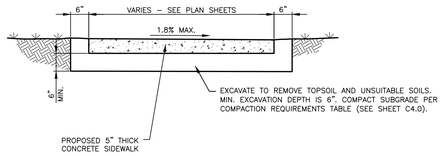

5 / C6.0 TYPICAL SIDEWALK SECTION
SCALE: NOT TO SCALE

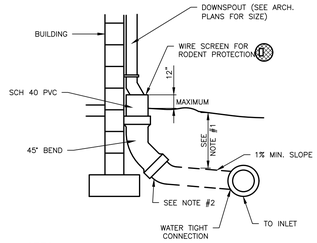

NOTES:

1. FOR ALL DEPTHS OF COVER LESS THAN TWO (2) FEET, PIPE MUST BE SCHEDULE 40 PVC. FOR ALL DEPTHS OF COVER GREATER THAN TWO (2) FEET, FLEXIBLE PIPE MAY BE USED.
2. A WATERTIGHT CONNECTION SHALL BE MAINTAINED WITH ANY TRANSITION FROM SCHEDULE 40 PVC PIPE TO ANY OTHER PIPE TYPE.
3. SITEWORK CONTRACTOR SHALL BE RESPONSIBLE FOR ALL WORK UP TO AND INCLUDING THE RODENT SCREEN. BUILDING CONTRACTOR SHALL BE RESPONSIBLE FOR THE CONNECTION AT THE POINT OF THE RODENT SCREEN.
4. INSTALL PIPES CLEAR OF PORCHES, BOLLARDS AND OTHER BUILDING APPURTENANCES.

6 / C6.0 DOWNSPOUT COLLECTOR (DSC)
SCALE: NOT TO SCALE

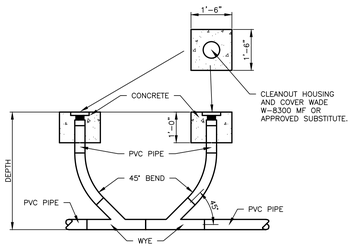

2 / C6.0 2-WAY CLEANOUT DETAIL
SCALE: NOT TO SCALE

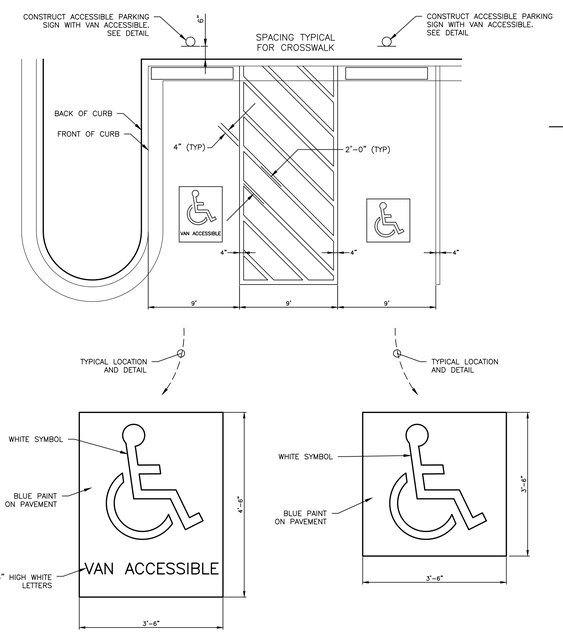

7 / C6.0 TYPICAL ACCESSIBLE STRIPING DETAILS
SCALE: NOT TO SCALE

8 / C6.0 TYPICAL ACCESSIBLE SIGNS (ALL SIGNS SHALL BE R7-8A, 12" x 18")
SCALE: NOT TO SCALE

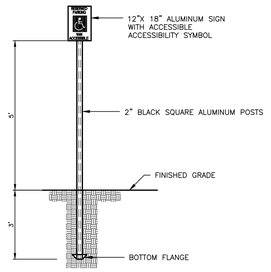

9 / C6.0 SIGN DETAIL
SCALE: NOT TO SCALE

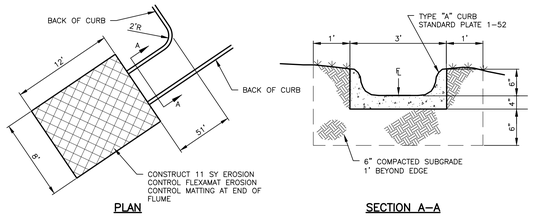

PLAN

SECTION A–A

3 / C6.0 P.C. CONCRETE FLUME DETAIL
SCALE: NOT TO SCALE

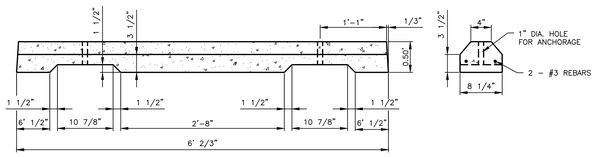

4 / C6.0 PRECAST CONCRETE WHEEL STOP
SCALE: NOT TO SCALE

LAMP RYNEARSON
LAMPRYNEARSON.COM
OMAHA, NEBRASKA
14710 W. DODGE RD., STE. 100 (402) 496.2498
NE AUTHORIZATION NO.: CA0135
FORT COLLINS, COLORADO
4715 INNOVATION DR., STE. 100 (970) 226.0342
KANSAS CITY, MISSOURI
9001 STATE LINE RD., STE. 200 (816) 361.0440
MO AUTH. NO.: E-2013011903 | LS-2010043127

PROFESSIONAL CIVIL ENGINEER
BRENDAN C. FINDALL
E-20023
10/16/2024
STATE OF NEBRASKA

BRENDAN FINDALL
E-20023

DETAILS

WELCH PLAZA – SITE PLAN
DOUGLAS COUNTY, NEBRASKA

811 Know what's below. Call before you dig.

ALL UTILITIES ARE SHOWN BASED ON THE INFORMATION AVAILABLE TO THE ENGINEER. THERE IS NO GUARANTEE ALL UTILITIES ARE SHOWN OR THAT THE LOCATION, DEPTH, AND SIZE OF EACH FACILITY IS CORRECT. THE CONTRACTOR IS RESPONSIBLE FOR LOCATING ALL UTILITIES AND SERVICE LINES PRIOR TO CONSTRUCTION.

REVISIONS

DESIGNER / DRAFTER: RICK KELLER
DATE: 10-18-2024
PROJECT NUMBER: 0120156.01-020/320
BOOK AND PAGE:

SHEET: C6.0

L:\Engineering\0120156 19622 Welch Plaza Plan Space Site Plan\DRAWINGS\CONSTRUCTION DRAWINGS\0120156-SITE-C3.dwg, 10/18/2024 11:14:51 PM, BRENDAN FINDALL, LAMP RYNEARSON

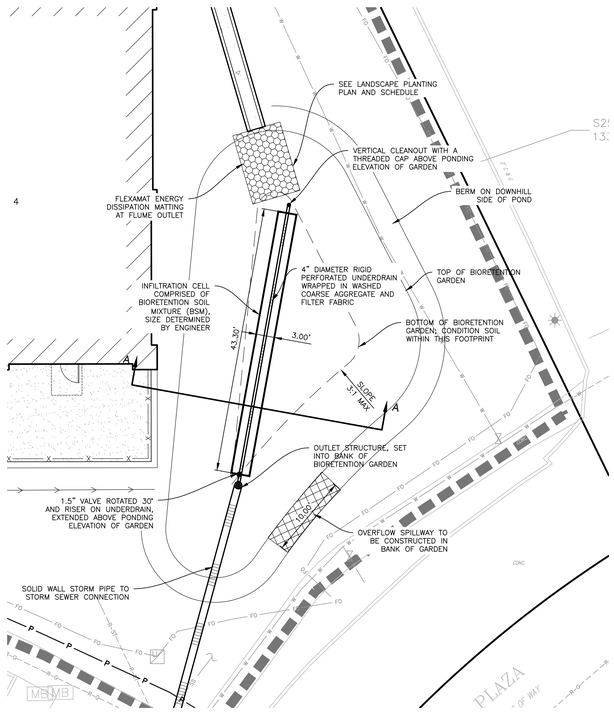

TYPICAL BIORETENTION GARDEN – PLAN VIEW
(NO SCALE)

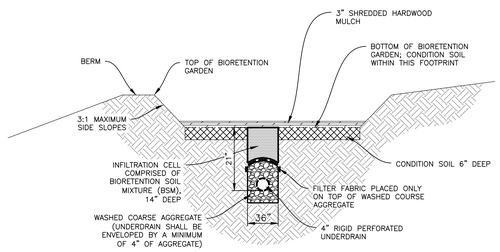

TYPICAL BIORETENTION GARDEN – SECTION A–A
(NO SCALE)

BIORETENTION GARDEN DATA TABLE

GARDEN NO.	BOTTOM OF GARDEN			TOP OF GARDEN ELEVATION	SPILLWAY		BSM INFILTRATION CELL DATA			OUTLET STRUCTURE
	WIDTH (FT)	LENGTH (FT)	ELEVATION		WIDTH (FT)	ELEVATION	WIDTH (FT)	LENGTH (FT)	DEPTH (FT)	
1	18	48	1225.00	1229.00	10	1228.00	3'	44'	1.75'	SEE STORM SEWER PLAN

POST CONSTRUCTION STORM WATER MANAGEMENT PLAN (PCSMP) GENERAL NOTES

1. IN ORDER TO MAINTAIN COMPLIANCE WITH CHAPTER 32 ARTICLE V, POST CONSTRUCTION STORMWATER MANAGEMENT PLANS (PCSMP), OF THE OMAHA MUNICIPAL CODE, THE FOLLOWING BEST MANAGEMENT PRACTICES (BMPS) MUST BE CERTIFIED BY THE RESPONSIBLE DESIGN PROFESSIONAL AS BEING INSTALLED/CONSTRUCTED PER PLAN;
   - ST03

3. PRIOR TO BEGINNING CONSTRUCTION, THE CONTRACTOR SHALL PROVIDE THE ENGINEER WITH SHOP DRAWINGS FOR ALL PCSMP BMPS. AS PART OF THE SHOP DRAWING SUBMITTAL THE CONTRACTOR SHALL INCLUDE A SCHEDULE AS TO WHEN THE BMPS WILL BE INSTALLED SO THE ENGINEER MAY MAKE ARRANGEMENTS TO BE ON-SITE TO OBSERVE THE INSTALLATION/CONSTRUCTION.

4. THE CONTRACTOR SHALL NOTIFY THE ENGINEER AT LEAST 48 HOURS PRIOR TO BEGINNING INSTALLATION/CONSTRUCTION ON ANY PCSMP BMP SO THE ENGINEER MAY MAKE ARRANGEMENTS TO OBSERVE THE BMPS BEING INSTALLED/CONSTRUCTED. IF THE CONTRACTOR INSTALLS/CONSTRUCTS THE BMPS WITHOUT NOTIFYING THE ENGINEER, THE ENGINEER MAY REQUIRE THAT THE BMPS BE REMOVED AND REINSTALLED OR THAT CERTAIN ASPECTS OF THE BMPS BE EXPOSED AND THEN REPLACED PER PLAN SO THE BMPS CAN BE CERTIFIED AS BEING CONSTRUCTED PER PLAN. THIS WORK WOULD OCCUR AT NO ADDITIONAL COST TO THE OWNER.

5. **ADDITIONAL EFFORT BY THE ENGINEER REQUIRED TO CERTIFY PCSMP BMPS DUE TO IMPROPER NOTIFICATION BY THE CONTRACTOR WILL BE BILLED DIRECTLY TO THE CONTRACTOR.**

6. PRIOR TO FINAL ACCEPTANCE, ALL PCSMP BMPS SHALL BE CLEANED PER THE MANUFACTURER'S RECOMMENDATIONS. ANY ACCUMULATED SOIL/SILT AND CONSTRUCTION DEBRIS SHALL BE REMOVED FROM THE BMP AND THE BMP RESTORED TO ITS ORIGINAL CONDITION AT NO ADDITIONAL COST TO THE OWNER.

7. THE CONTRACTOR SHALL ARRANGE FOR THE SITE SURVEYOR TO PROVIDE THE ENGINEER WITH AS-BUILT ELEVATIONS FOR ALL PCSMP BMPS TO INCLUDE WITH THE BMP CERTIFICATION AT NO ADDITIONAL COST TO THE OWNER.

8. FOR ANY MANUFACTURED SYSTEM, THE CONTRACTOR SHALL SUBMIT TO THE ENGINEER AN INSTALLATION CERTIFICATION LETTER FROM A REPRESENTATIVE OF THE MANUFACTURER. THE LETTER SHALL STATE THAT THE SYSTEM WAS INSTALLED PER THE MANUFACTURER'S RECOMMENDATIONS.

9. **PCSMP WILL NEED TO BE CERTIFIED BY THE ENGINEER PRIOR TO THE CITY RELEASING THE CERTIFICATE OF OCCUPANCY (CO). THE CONTRACTOR SHALL PROVIDE A MINIMUM OF TWO WEEKS NOTICE TO THE ENGINEER PRIOR TO SUBMITTING THE CO REQUEST TO THE CITY TO ENSURE ADEQUATE TIME FOR CERTIFICATION.**

BIORETENTION GARDEN ACCEPTABLE PLANT LIST

CODE	BOTANICAL NAME	COMMON NAME	LOCATION
S-1	PANICUM VIRGATUM 'HEAVY METAL'	HEAVY METAL SWITCHGRASS	BOTTOM *
S-2	JUNCUS EFFUSUS	COMMON RUSH	BOTTOM
S-3	CAREY SCOPARIA	BROOM SEDGE	BOTTOM
S-4	RUDBECKIA SUBTOMENTOSA	SWEET CONEFLOWER	BOTTOM AND SIDE
S-5	MONARDA FISTULOSA	BERGAMOT	BOTTOM AND SIDE
S-6	BOLTONIA ASTEROIDS 'SNOWBANK'	BOLTONIA	SIDE
S-7	EUPATORIUM PURPUREUM DWARF 'LITTLE RED'	JOE-PYE WEED	SIDE
S-8	ASTER OBLONGIFOLIUS	AROMATIC ASTER	SIDE
S-9	ZIZIA AUREA	GOLDEN ALEXANDERS	SIDE
S-10	LIATRIS PYCNOSTACHYA	PRAIRIE BLAZING STAR	SIDE
S-11	SCHIZACHYRIUM SCOPARIUM	LITTLE BLUESTEM	SIDE *
S-12	ECHINACEA PALLIDA	KNEE-HIGH CONEFLOWER	SIDE AND TOP
S-13	SPORNOBOLUS HETEROLEPIS	PRAIRIE DROPSEED	TOP *
S-14	BOUTELOUA CURTIPENDULA	SIDEOATS GRAMA	TOP

* REQUIRED SPECIES MUST BE INCLUDED IN BIORETENTION GARDEN PLANTINGS.

NOTES

1. USE A MINIMUM OF 8 DIFFERENT SPECIES.
2. SPACE PLANTS AT 18" O.C. UNLESS OTHERWISE NOTED.
3. ANY PLANT SUBSTITUTIONS MUST BE APPROPRIATE FOR USE IN A BIORETENTION GARDEN. SEE UNIVERSITY OF NEBRASKA–LINCOLN EXTENSION PUBLICATIONS "STORMWATER MANAGEMENT PLANT SELECTION FOR BIORETENTION GARDENS IN NEBRASKA" AT WWW.IANRPUBS.UNL.EDU
4. APPLY GRANULAR PRE-EMERGENT WEED CONTROL WITHIN LIMITS OF GARDEN.
5. PLANT EACH SPECIES IN A GROUP OF 4 MINIMUM.
6. ALL PLANTS SHALL BE QUART SIZE MINIMUM OR LARGER.

PLANT NOTES

1. BIORETENTION GARDEN SHALL BE PLANTED WITH A MINIMUM OF 5 DIFFERENT PLANT SPECIES SELECTED PER NOTES 2 AND 3 BELOW.
2. EACH GARDEN SHALL INCLUDE HEAVY METAL SWITCHGRASS (PANICUM VIRGATUM 'HEAVY METAL'), LITTLE BLUESTEM (SCHIZACHYRIUM SCOPARIUM) AND COMMON FOX SEDGE (CAREX STIPATA) AS THREE OF THE REQUIRED PLANT SPECIES.
3. ANY PLANT SELECTIONS MUST BE APPROPRIATE FOR USE IN A BIORETENTION GARDEN IN THE MIDWEST. GUIDELINES FOR NATIVE AND ADAPTED VEGETATION ARE INCLUDED IN THE "NEBRASKA BIORETENTION AND RAIN GARDEN PLANTS GUIDE" PUBLISHED BY THE UNIVERSITY OF NEBRASKA–LINCOLN EXTENSION (RODIE AND TODD, 2010), WWW.EXTENSIONPUBS.UNL.EDU, OR THROUGH THE OMAHA PLANTS WEBSITE, WWW.OMAHAPLANTS.ORG.
4. SPACE PLANTS AT 18" ON CENTER UNLESS OTHERWISE NOTED.
5. PLANT EACH SPECIES IN GROUPINGS OF 5 OR MORE.
6. PLANTS SHALL BE MINIMUM OF 1 QUART IN SIZE.
7. APPLY GRANULAR PRE-EMERGENT WEED CONTROL WITHIN LIMITS OF GARDEN.

BIORETENTION GARDEN PLANT COUNT

GARDEN NO.	GARDEN SQUARE FOOTAGE	NUMBER OF PLANTS REQUIRED (MINIMM)
1	1,980	(SF X 0.44) = 871

OMA-20240927-7576-P

BIORETENTION GARDEN GENERAL NOTES

INFILTRATION CELL/BIORETENTION SOIL MIXTURE (BSM)

1. BIORETENTION GARDENS MUST UTILIZE AN INFILTRATION CELL WITH A BIORETENTION SOIL MIXTURE (BSM) AND UNDERDRAIN SYSTEM.
2. THE BSM SHALL BE 80% SAND AND 20% ORGANIC COMPOST BY VOLUME. THE ENGINEER RETAINS THE RIGHT TO TEST THE PERMEABILITY OF THE BSM.
3. THE BSM SHALL BE A UNIFORM MIX, FREE OF PLANT RESIDUE, STONES, STUMPS, ROOTS OR OTHER SIMILAR OBJECTS LARGER THAN 2".
4. THE BSM SHALL BE PLACED AND GRADED USING LOW GROUND CONTACT PRESSURE EQUIPMENT OR, IF APPROVED BY THE ENGINEER, BY EXCAVATORS AND/OR BACKHOES OPERATING ON THE GROUND ADJACENT TO THE BIORETENTION GARDEN. NO HEAVY EQUIPMENT SHALL BE USED WITHIN THE PERIMETER OF THE BIORETENTION GARDEN BEFORE, DURING OR AFTER THE PLACEMENT OF THE BSM.
5. THE BSM SHALL BE PLACED IN HORIZONTAL LIFTS IN DEPTHS NOT EXCEEDING 12" FOR THE ENTIRE AREA OF THE BIORETENTION GARDEN.
6. THE BSM SHALL BE PRE-MIXED, WITH A MOISTURE CONTENT LOW ENOUGH TO PREVENT CLUMPING AND COMPACTION DURING PLACEMENT. IF THE BSM BECOMES CONTAMINATED DURING THE CONSTRUCTION OF THE GARDEN, THE CONTAMINATED MATERIAL SHALL BE REMOVED AND REPLACED WITH UNCONTAMINATED MATERIAL AT THE CONTRACTOR'S EXPENSE.
7. FINAL GRADING OF THE BSM SHALL BE PERFORMED AFTER A 24 HOUR SETTLING PERIOD. UPON FINAL GRADING THE SURFACE OF THE BSM SHALL BE ROTOTILLED TO A DEPTH OF 6".

SOIL CONDITIONING

1. SOIL SHALL BE CONDITIONED IN LOCATIONS NOTED ON THE PLANS, INCLUDING THE ENTIRE BOTTOM SURFACE OF THE BIORETENTION GARDEN. SIDE SLOPES OF A GARDEN SHALL NOT BE CONDITIONED UNLESS THE SLOPE IS LESS THAN 10:1.
2. EXISTING VEGETATION, INCLUDING TURF, SHALL BE REMOVED AND THE GROUND SHALL BE TILLED TO A MINIMUM DEPTH OF 6".
3. A 3" LAYER OF ORGANIC COMPOST SHALL BE PLACED ON TOP OF THE TILLED GROUND AND SUBSEQUENTLY BE TILLED INTO A DEPTH OF 6" OF EXISTING SOIL. OMAGROW, IF AVAILABLE, IS AN ACCEPTABLE ALTERNATE FOR COMPOST. IF USED, ONLY A 2" LAYER OF OMAGROW IS REQUIRED.
4. FINE GRADING OF THE SITE SHALL BE COMPLETED WITH NO MORE THAN TWO EQUIPMENT PASSES TO REDUCE THE POTENTIAL FOR SOIL COMPACTION.
5. VEGETATIVE COVER SHALL BE ESTABLISHED IMMEDIATELY AFTER FINE GRADING.

SAND

1. SAND SHALL MEET THE REQUIREMENTS OF NEBRASKA DEPARTMENT OF TRANSPORTATION CLASS A AGGREGATE.

SIEVE	TARGET	TOLERANCE
1"	--	--
3/8"	100%	NONE
#4	96	±4
#10	77	±13
#30	25	±15
#200	1.5	±1.5

ORGANIC COMPOST

1. ORGANIC COMPOST SHALL BE DERIVED FROM PLANT MATERIAL, SHALL BE WELL COMPOSTED, FREE OF VIABLE WEED SEEDS AND STABILIZED WITH REGARD TO OXYGEN CONSUMPTION AND CARBON DIOXIDE GENERATION. ANIMAL OR POULTRY MANURE SHALL NOT BE ACCEPTABLE.
2. COMPOST SHALL HAVE A MOISTURE CONTENT THAT HAS NO VISIBLE FREE WATER OR DUST PRODUCED WHEN HANDLING THE MATERIAL.
3. COMPOST CRITERIA:

	MIN.	MAX.
ORGANIC MATTER CONTENT	35%	65%
CARBON/NITROGEN RATIO	–	25:1
PH	6	8
BULK DENSITY (LBS/CU FT)	40	50

SHREDDED HARDWOOD MULCH

1. MULCH SHALL BE DOUBLE OR TRIPLE SHREDDED HARDWOOD MULCH.
2. MULCH SHALL BE WELL AGED (6 MONTHS MINIMUM).
3. SUBSTITUTES INCLUDING ROCK, BEAN HUSES, CYPRUS OR CEDAR, OR ANOTHER NON-HARDWOOD MULCH WILL NOT BE ACCEPTED.

WASHED COARSE AGGREGATE

1. COARSE AGGREGATE SHALL MEET THE REQUIREMENTS OF NEBRASKA DEPARTMENT OF TRANSPORTATION CLASS E AGGREGATE.

RIVER ROCK

1. RIVER ROCK SHALL BE A NATURAL STONE MATERIAL AND SHALL BE "ROUNDED" BY NATURALLY OCCURRING PROCESSES.
2. ROCK SHALL BE UNIFORM WITH A MAXIMUM OF 6" DIAMETER.
3. FOR CALCULATIONS PURPOSES, ASSUME 100 LBS/CU FT.

FILTER FABRIC

1. MIRAFI 140N OR APPROVED SUBSTITUTE.

UNDERDRAIN, CLEANOUT AND VALVE

1. UNDERDRAIN SHALL BE COMPRISED OF A 4" OR LARGER RIGID PIPE EXTENDING 90% OF THE LONGEST SIDE OF THE SYSTEM. UNDERDRAIN SHALL BE ENVELOPED BY A MINIMUM OF 4" THICK WASHED COURSE AGGREGATE. FILTER FABRIC SHALL WRAP THE UNDERDRAIN AND COURSE AGGREGATE. AGGREAGTE AND FILTER FABRIC SHALL BE SLOPED IN AN UPWARD ARCHING MANNER THAT LIMITS CLOGGING OF THE MATERIAL.
2. CLEANOUT SHALL BE COMPRISED OF A 4" NON-PERFORATED HDPE PIPE PLACED VERTICALLY IN THE BIORETENTION GARDEN AT THE LOCATION SHOW ON THE PLANS. THE CLEANOUT SHALL BE CONNECTED TO THE PERFORATED UNDERDRAIN AND SHALL EXTEND ABOVE THE PONDING ELEVATION OF THE GARDEN. THE CLEANOUT SHALL RECEIVE A THREADED CAP.
3. THE USE OF A VALVE PROVIDES FLEXIBILITY IN ORDER TO OPTIMIZE WATER QUALITY BENEFITS BY INCREASING THE DRAWDOWN TIME AND CAN ALSO BE USED TO MANAGE WATER LEVELS TO PROMOTE VEGETATION GROWTH DURING SEASONAL FLUCTUATIONS IN PRECIPITATION. A VALVE AND ACCESS RISER SHALL BE CONSTRUCTED UPSTREAM OF THE POND OUTLET STRUCTURE ON THE UNDERDRAIN PIPE.

CONSTRUCTION SEQUENCE

1. GARDENS MAY FUNCTION AS A TEMPORARY SEDIMENT BASIN UNTIL THE SITE IS PAVED AND HAS BEEN STABILIZED WITH SEED OR SOD.
2. IF USED AS A TEMPORARY SEDIMENT TRAP, THE OUTLET STRUCTURE SHALL BE PROPERLY PROTECTED TO PREVENT SILT FROM ENTERING THE STORM SEWER SYSTEM.
3. THE PLACEMENT OF THE BIORETENTION SOIL MIX, UNDERDRAIN SYSTEM, SOIL CONDITIONING AND PLANTINGS SHALL NOT TAKE PLACE UNTIL THE REMAINDER OF THE SITE HAS BEEN ESTABLISHED AND SILT HAS BEEN REMOVED FROM THE TEMPORARY SEDIMENT BASIN.
4. THE ENGINEER MUST BE CONTACTED PRIOR TO THE CONVERSION OF THE SEDIMENT BASIN TO A BIORETENTION GARDEN.
5. AS AN ALTERNATE, THE BIORETENTION GARDEN MAY BE CONSTRUCTED PRIOR TO THE SITE BEING PAVED AND STABILIZED. IF THIS ALTERNATE IS CHOSEN, ALL OVERLAND STORM FLOWS MUST BE DIVERTED OR BLOCKED FROM ENTERING THE GARDEN TO PREVENT ANY ACCUMULATION OF SILT WITHIN THE GARDEN AND THE GARDEN MUST BE ENCLOSED WITH SAFETY FENCE. ADDITIONALLY, STEPS TO ENSURE THE STABILIZATION OF SIDE SLOPES, SUCH AS STRAW WATTLES AND ROLLED EROSION CONTROL MATTING ARE REQUIRED.
6. IF THE BIORETENTION GARDEN BECOMES CONTAMINATED DURING THE CONSTRUCTION OF THE GARDEN, THE CONTAMINATED MATERIAL SHALL BE REMOVED AT THE CONTRACTOR'S EXPENSE.

LAMP RYNEARSON
LAMPRYNEARSON.COM
OMAHA, NEBRASKA
14710 W. DODGE RD., STE. 100 (402) 496.2498
NE AUTHORIZATION NO.: CA0130
FORT COLLINS, COLORADO
4715 INNOVATION DR., STE. 100 (970) 226.0342
KANSAS CITY, MISSOURI
9001 STATE LINE RD., STE. 200 (816) 361.0440
MO AUTH. NO.: E-2013011903 | LS-2019043127

PROFESSIONAL CIVIL ENGINEER
BRENDAN C. FINDALL
E-20023
10/16/2024
STATE OF NEBRASKA

BRENDAN FINDALL
E-20023

RAIN GARDEN DETAILS

WELCH PLAZA – SITE PLAN
DOUGLAS COUNTY, NEBRASKA

811 Know what's below. Call before you dig.

ALL UTILITIES ARE SHOWN BASED ON THE INFORMATION AVAILABLE TO THE ENGINEER. THE EXACT LOCATION OF ALL FACILITIES ARE SHOWN ON THAT THE LOCATION, DEPTH, AND SIZE MAY BE INCORRECT. THE CONTRACTOR IS RESPONSIBLE FOR LOCATING ALL UTILITIES AND SERVICE LINES PRIOR TO CONSTRUCTION.

REVISIONS

DESIGNER / DRAFTER
RICK KELLER
DATE
10-18-2024
PROJECT NUMBER
0120156.01-020/320
BOOK AND PAGE

SHEET
C7.0

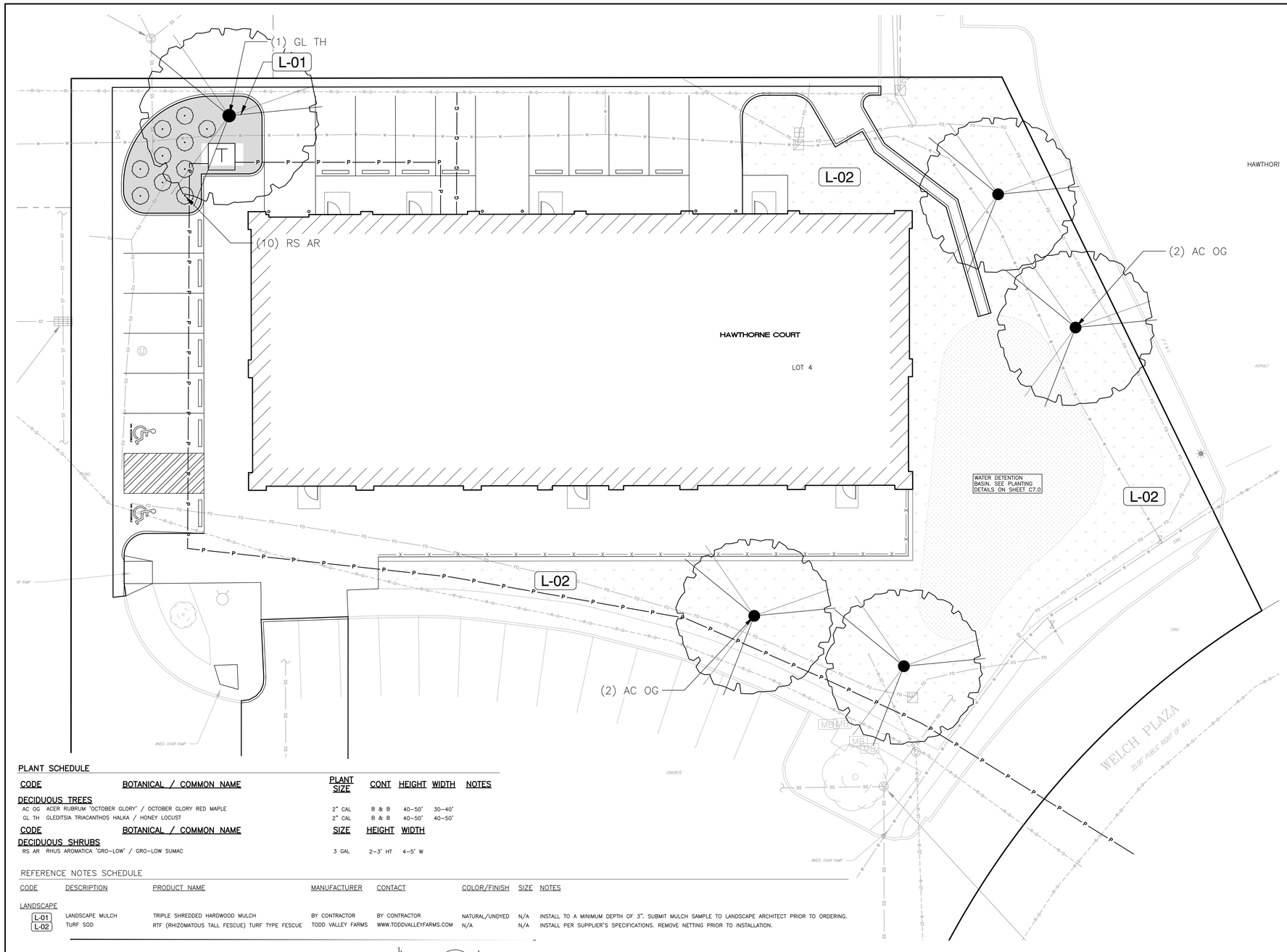

PLANT SCHEDULE

CODE	BOTANICAL / COMMON NAME	PLANT SIZE	CONT	HEIGHT	WIDTH	NOTES
DECIDUOUS TREES						
AC OG	ACER RUBRUM 'OCTOBER GLORY' / OCTOBER GLORY RED MAPLE	2" CAL	B & B	40–50'	30–40'	
GL TH	GLEDITSIA TRIACANTHOS HALKA / HONEY LOCUST	2" CAL	B & B	40–50'	40–50'	
CODE	**BOTANICAL / COMMON NAME**	**SIZE**	**HEIGHT**	**WIDTH**		
DECIDUOUS SHRUBS						
RS AR	RHUS AROMATICA 'GRO–LOW' / GRO–LOW SUMAC	3 GAL	2–3' HT	4–5' W		

REFERENCE NOTES SCHEDULE

CODE	DESCRIPTION	PRODUCT NAME	MANUFACTURER	CONTACT	COLOR/FINISH	SIZE	NOTES
LANDSCAPE							
L-01	LANDSCAPE MULCH	TRIPLE SHREDDED HARDWOOD MULCH	BY CONTRACTOR	BY CONTRACTOR	NATURAL/UNDYED	N/A	INSTALL TO A MINIMUM DEPTH OF 3". SUBMIT MULCH SAMPLE TO LANDSCAPE ARCHITECT PRIOR TO ORDERING.
L-02	TURF SOD	RTF (RHIZOMATOUS TALL FESCUE) TURF TYPE FESCUE	TODD VALLEY FARMS	WWW.TODDVALLEYFARMS.COM	N/A	N/A	INSTALL PER SUPPLIER'S SPECIFICATIONS. REMOVE NETTING PRIOR TO INSTALLATION.

GENERAL NOTES

1. CONTRACTOR TO VERIFY LOCATION OF ALL PROPOSED AND EXISTING VAULTS, ELECTRICAL DUCT BANKS, MANHOLES, CONDUIT AND PIPING, DRAINAGE STRUCTURES AND OTHER UTILITIES PRIOR TO COMMENCING WORK.
2. CONTRACTOR SHALL NOT WILLFULLY INSTALL ANY PROPOSED LANDSCAPE IMPROVEMENTS WHEN CONFLICTS EXIST BETWEEN LANDSCAPE IMPROVEMENTS AND EXISTING OR PROPOSED UTILITIES OR SITE FEATURES SUCH AS WALKS, ROADS, BUILDINGS OR EXISTING TREES TO REMAIN.
3. VERIFY LOCATION OF ALL BUILDINGS, WALLS, ROADS AND CURBS AFFECTING LANDSCAPE SCOPE OF WORK WITH ARCHITECTS AND CONTRACTOR ENGINEER'S DRAWINGS.
4. ALL WORK PERFORMED WITHIN THE DRIP LINE OF TREES DESIGNATED "EXISTING TREES TO REMAIN" SHALL BE HAND LABOR.
5. REFERENCE TO NORTH REFERS TO TRUE NORTH, REFERENCE TO SCALE IS FOR FULL–SIZED DRAWINGS ONLY. DO NOT SCALE FROM REDUCED DRAWINGS.
6. DIMENSIONS TAKE PRECEDENCE OVER SCALES SHOWN ON DRAWINGS.
7. WHERE NOT SHOWN ON THE PLANTING PLANS, SEE CONTRACTOR ENGINEER'S AND ARCHITECT'S DRAWINGS FOR BUILDING FOUNDATIONS SETBACKS, BOUNDARIES, SUBSURFACE AND ABOVE GRADE UTILITIES.

TREE PLANTING NOTES

1. PROVIDE MATCHING SIZES AND FORMS FOR EACH SPECIES OF TREE INSTALLED ON GRID OR SPACED EQUALLY IN ROWS AS SHOWN ON DRAWINGS. ALIGN TREES ACROSS WALKS. ADJUST SPACING AS NECESSARY, SUBJECT TO REVIEW BY THE LANDSCAPE ARCHITECT.
2. REPLACEMENT OF UNACCEPTABLE PLANT MATERIAL: THE CONTRACTOR'S RESPONSIBILITY FOR REPLACEMENT OF UNACCEPTABLE PLANT MATERIAL SHALL EXTEND FOR TWO (2) YEARS AFTER ALL PLANT MATERIAL IS ACCEPTED BY THE ENGINEER.
3. MULCH: THE CONTRACTOR SHALL PLACE TRIPLE SHREDDED HARDWOOD MULCH IN A CONSISTENT THICKNESS AS NOTED IN THE PLANTING DETAILS. ANY MULCH PLACED IN EXCESS OF THE REQUIREMENTS SHALL BE AT THE CONTRACTORS EXPENSE. CHIPS OR BARK MULCH ARE NOT ALLOWED.
4. IN LIEU OF IRRIGATION, ALL NEWLY PLANTED TREES TO RECEIVE "TREEGATOR SLOW RELEASE WATERING BAG" BY SPECTRUM PRODUCTS, INC. OR OWNER APPROVED EQUAL. CONTRACTOR SHALL INSTALL AND FILL WATERING BAGS PER MANUFACTURERS SPECIFICATIONS.

PLANTING NOTES

1. INSTALL ALL TREES A MINIMUM OF FOUR (4) FEET FROM BACK OF CURB, EDGE OF WALL, OR PAVING.
2. THE LOCATION OF ALL TREES SHALL BE APPROVED BY LANDSCAPE ARCHITECT PRIOR TO FINAL INSTALLATION.
3. PLANT NAMES ARE ABBREVIATED ON THE DRAWINGS. SEE PLANT LIST FOR KEY AND CLASSIFICATION.
4. PLACE A 3" DEPTH LAYER OF TRIPLE SHREDDED HARDWOOD MULCH ON ALL PLANTING AREAS. SUBMIT SAMPLE TO LANDSCAPE ARCHITECT FOR APPROVAL. CHIPS OR BARK MULCH ARE NOT ALLOWED.
5. LOCATION OF ALL PLANTING IS DIAGRAMMATIC. DO NOT WILLFULLY LOCATE PLANTINGS WHERE CONFLICTS EXIST WITH UTILITIES OR THE BUILDING.
6. EXISTING AND IMPORTED SOIL FOR PLANTING AREAS SHALL BE FREE FROM CHEMICALS, CONSTRUCTION DEBRIS AND TRASH, ROCKS AND OTHER MATERIAL LARGER THAN ONE INCH IN DIAMETER.
7. STEEL EDGING AND SPADE–CUT EDGE PLACEMENT SHALL BE REVIEWED BY LANDSCAPE ARCHITECT PRIOR TO FINAL INSTALLATION. PROVIDE AN ALLOWANCE OF 5 PERCENT OF THE TOTAL LINEAL FOOTAGE OF EDGING TO BE CONSTRUCTED DURING THE PROGRESS OF WORK, AS MAY BE DIRECTED BY THE LANDSCAPE ARCHITECT, IN ADDITION TO ALL EDGING INDICATED ON THE DRAWINGS.
8. APPLY GRANULAR PRE–EMERGENT WEED CONTROL TO AREAS TO RECEIVE SHRUBS, GROUNDCOVERS, AND NON–LAWN ORNAMENTAL PLANTING AFTER INCORPORATING SOIL AMENDMENTS. THE CONTRACTOR SHALL PLACE TRIPLE SHREDDED HARDWOOD MULCH AT ALL LANDSCAPED ISLANDS NOT RECEIVING SOD.
9. PLANT QUANTITIES ARE SHOWN FOR THE CONVENIENCE TO THE CONTRACTOR. IF THERE ARE DISCREPANCIES BETWEEN THE PLAN AND NOTES, THE PLANS SHALL GOVERN.
10. ALL PLANTED AREAS TO BE AMENDED PER AN AGRICULTURAL/SOIL SUITABILITY TEST, PAID FOR BY OWNER. FOR BID PURPOSES CONTRACTOR SHALL ESTIMATE SPREADING SOIL AMENDMENT AT THE RATE OF 6 CUBIC YARDS PER 1,000 SQUARE FEET. TILL INTO THE TOP OF SOIL TO A MINIMUM DEPTH OF 6". RAKE TO A SMOOTH, EVEN SURFACE PER THE GRADING PLANS.

SEED AND SOD NOTES

1. SOD SHALL BE A FIRST–CLASS REPRESENTATION OF SPECIFIED SPECIES. SOD SHALL RECEIVE FERTILIZER AT THE RATE OF 9 POUNDS NITROGEN (N2) AND 24 POUNDS PHOSPHORIC ACID (P2O5) PER 1000 SQUARE YARDS AND IN ACCORDANCE WITH THE CITY OF OMAHA "STANDARD SPECIFICATIONS FOR PUBLIC WORKS CONSTRUCTION," 2024 EDITION AND ANY CURRENT REVISION OR AMENDMENTS THERETO SHALL APPLY.
2. MAINTENANCE: BEGIN MAINTENANCE OF ALL SOD AND SEED AREAS IMMEDIATELY FOLLOWING INSTALLATION. MAINTENANCE TO INCLUDE WATERING, WEEDING, AND MOWING. MOW WHEN TURF HAS GROWN TO A HEIGHT BETWEEN 3 AND 4 INCHES. MOW TO A HEIGHT OF 2 TO 2–1/2 INCHES. REMOVE AND REPLACE SODDED AREAS THAT FAIL TO SURVIVE. MAINTENANCE PERIOD TO BE 30 DAYS. CONTRACTOR TO NOTIFY OWNER ONE WEEK PRIOR OF THE CONCLUSION OF THE MAINTENANCE PERIOD.
3. LAWN AND TURF SEED, WHETHER IRRIGATED OR NON–IRRIGATED, SHALL BE INTERAGENCY BLUETAG CERTIFIED AND SHALL HAVE A MINIMUM GERMINATION RATE OF NINETY (90) PERCENT AND A PURITY OF NINETY–EIGHT (98) PERCENT, SEE LANDSCAPE SCHEDULE.
4. ALL SEEDED AREAS SHALL RECEIVE FERTILIZER AND EROSION CONTROL MATTING CONFORMING TO THE REQUIREMENTS OF THE CITY OF OMAHA STANDARD SPECIFICATIONS FOR PUBLIC WORKS CONSTRUCTION.
5. RESEEDING AND/OR RESODDING FOR DISTURBED AREAS OUTSIDE OF CONSTRUCTION LIMITS: THE CONTRACTOR WILL RESEED AND/OR RESOD ALL AREAS DISTURBED DURING THE COURSE OF CONSTRUCTION. THIS ITEM WILL NOT BE PAID FOR SEPARATELY, BUT WILL BE CONSIDERED INCIDENTAL TO THE PLANTING OF NEW VEGETATION.

SCARIFIED AND CONDITIONED SOIL NOTES

1. ALL NON–PAVED AND NON–BUILDING DISTURBED AREAS SHALL BE SCARIFIED BY COMPLETELY BREAKING UP THE SOIL TO A MINIMUM DEPTH OF 12".
2. TILL AND CONDITION TOP 6" OF ALL AREAS TO RECEIVE LANDSCAPING.
3. USE AN ORGANIC COMPOST MEETING THE REQUIREMENTS SPECIFIED BELOW.
4. A THREE INCH DEEP LAYER OF COMPOST SHALL BE PLACED ON TOP OF ALL LANDSCAPE AREAS.
5. THE COMPOST SHALL BE TILLED INTO THE EXISTING SOIL TO A DEPTH OF SIX INCHES.

COMPOST NOTES

USE A COMPOST MEETING THE REQUIREMENTS OF THIS SECTION. MATERIAL SHALL BE WELL COMPOSTED, FREE OF WEED SEEDS AND STABILIZED WITH REGARD TO OXYGEN CONSUMPTION AND CARBON DIOXIDE GENERATION. COMPOST SHALL HAVE A MOISTURE CONTENT THAT HAS NO VISIABLE FREE WATER OR DUST PRODUCED WHEN HANDLING THE MATERIAL. ONE HUNDRED PERCENT OF THE MATERIAL MUST PASS THROUGH A HALF INCH SCREEN. MANUFACTURED INERT MATERIAL SHALL BE LESS THAN 1.0% BY WEIGHT.

	MIN	MAX
ORGANIC MATTER CONTENT	35%	65%
C/N RATIO	–	25:1
PH	6.0	8.0
BULK DENSITY (LBS/CF)	40	50

WARRANTY:

THE CONTRACTOR SHALL WARRANTY PLANT MATERIALS FOR A PERIOD OF TWO (2) YEARS FROM THE DATE OF SUBSTANTIAL COMPLETION, AGAINST DEFECTS INCLUDING DEATH AND UNSATISFACTORY GROWTH, EXCEPT FOR DEFECTS RESULTING FROM ABUSE OR DAMAGE BY OTHERS, OR UNUSUAL PHENOMENA OR INCIDENTS WHICH ARE BEYOND THE CONTROL OF THE CONTRACTOR. WARRANTY COVERS A MAXIMUM OF ONE REPLACEMENT PER ITEM.

CONTRACTOR QUALIFICATIONS

1. THE CONTRACTOR SHALL BE CERTIFIED AND HAVE AT LEAST 3 YEARS OF LANDSCAPING EXPERIENCE INSTALLING SIMILAR TYPES OF PROJECTS.

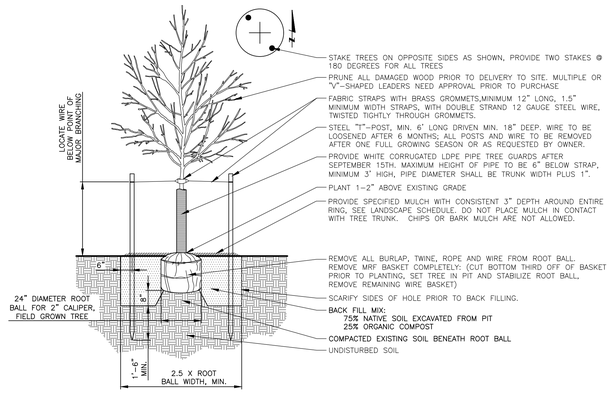

NOTES:
1. IF HOLE IS TOO DEEP, ANY SOIL ADDED TO RAISE THE ROOT BALL SHOULD BE COMPACTED.
2. SEE COMPOST NOTES, SHEET LANDSCAPE NOTES AND SCHEDULES.

1 C8.0 DECIDUOUS TREE PLANTING & STAKING
SCALE: NOT TO SCALE

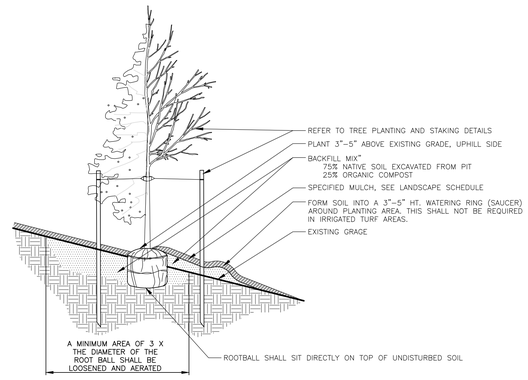

NOTES:
1. SEE COMPOST NOTES, SHEET LANDSCAPE NOTES AND SCHEDULES.
2. TREES SHALL BE PLANTED WITH THE TOP MOST ROOT IN THE ROOTBALL 3"–5" HIGHER THAN THE FINISHED LANDSCAPE GRADE. TREES WHERE THE TRNK FLARE IS NOT VISIBLE SHALL BE REJECTED.
3. PRUCE ALL DEAD OR DAMAGED WOOD AFTER PLANTING.

2 C8.0 TREE PLANTING ON A SLOPE
SCALE: NOT TO SCALE

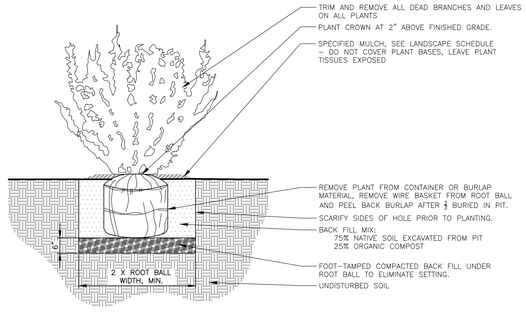

NOTES:
1. SEE COMPOST NOTES, SHEET LANDSCAPE NOTES AND SCHEDULES.
2. BROKEN OR CRUMBLING ROOT–BALLS WILL BE REJECTED.
3. PRUNE ALL DEAD OR DAMAGED WOOD PRIOR TO PLANTING, DO NOT PRUNE MORE THAN 20% OF LIMBS.

3 C8.0 TYPICAL SHRUB PLANTING
SCALE: NOT TO SCALE

LAMP RYNEARSON
LAMPRYNEARSON.COM
OMAHA, NEBRASKA
14710 W. DODGE RD. STE. 100 (402) 496.2498
NE AUTHORIZATION NO.: CA0135
FORT COLLINS, COLORADO
4715 INNOVATION DR., STE. 100 (970) 226.0342
KANSAS CITY, MISSOURI
9001 STATE LINE RD., STE. 200 (816) 361.0440
MO AUTH. NO.: E-2013011903 | LS-2019043127

0 10' 20'

PROFESSIONAL CIVIL ENGINEER
BRENDAN C. FINDALL
E-20023
10/16/2024
STATE OF NEBRASKA

BRENDAN FINDALL
E-20023

LANDSCAPE PLAN & NOTES

WELCH PLAZA – SITE PLAN
DOUGLAS COUNTY, NEBRASKA

811 Know what's below. Call before you dig.

ALL UTILITIES ARE SHOWN BASED ON THE INFORMATION AVAILABLE TO THE ENGINEER. THE EXACT LOCATION OF ALL FACILITIES ARE SHOWN ON THAT THE LOCATION, DEPTH AND SIZE OF ALL UTILITIES ARE CORRECT. THE CONTRACTOR IS RESPONSIBLE FOR LOCATING ALL UTILITIES AND SERVICE LINES PRIOR TO CONSTRUCTION.

REVISIONS

DESIGNER / DRAFTER
RICK KELLER
DATE
10–18–2024
PROJECT NUMBER
0120156.01–020/320
BOOK AND PAGE

SHEET
C8.0

L:\Engineering\0120156 (7922 Welch Plaza Fka Spore Site Plan\DRAWINGS\CONSTRUCTION DRAWINGS\0120156-SITE-LS-C3.dwg, 10/16/2024 11:34:46 PM, BRENDAN FINDALL, LAMP RYNEARSON

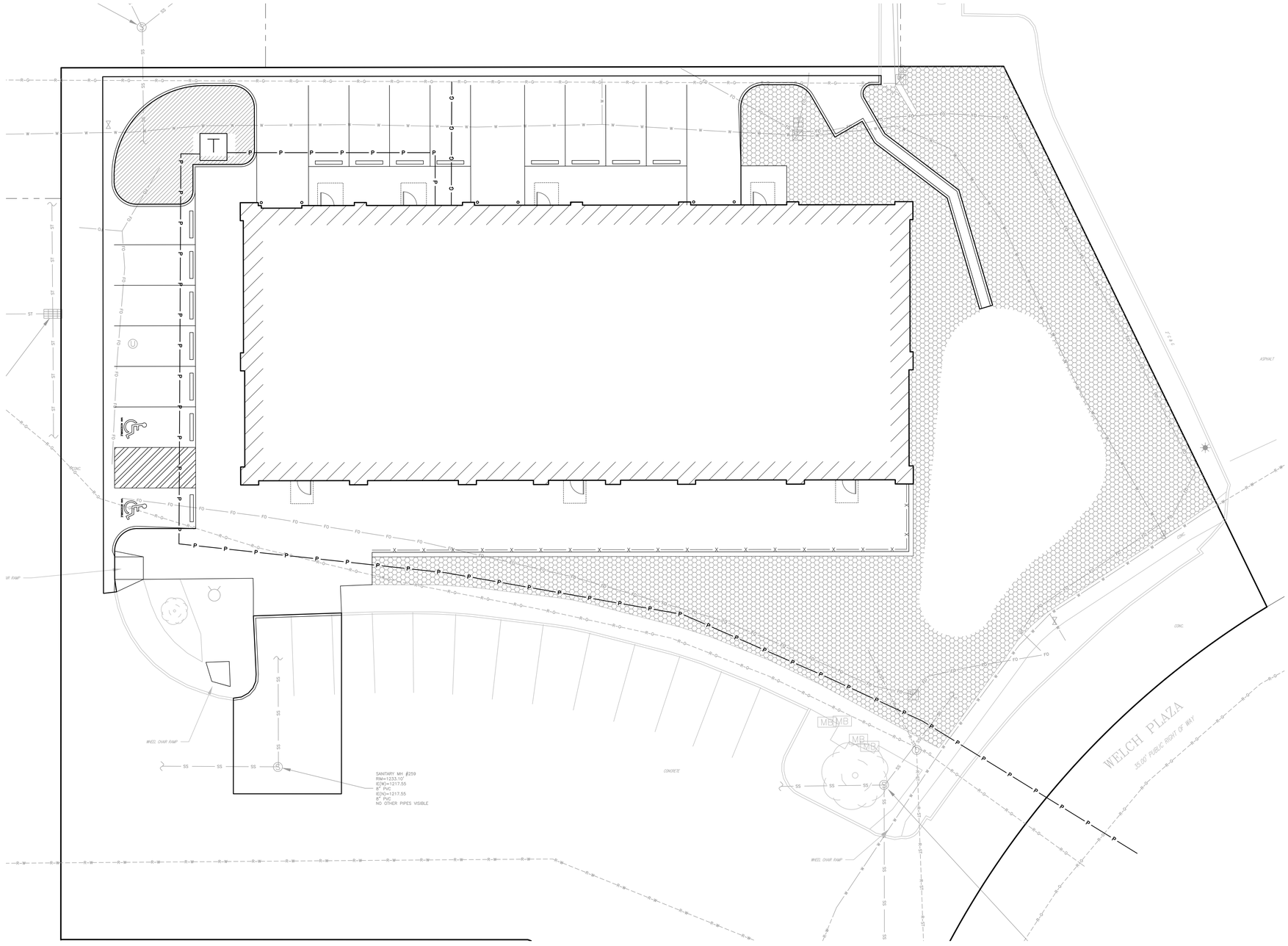

IRRIGATION NOTES

1. THE CONTRACTOR SHALL MODIFY THE EXISTING IRRIGATION SYSTEM, AS NECESSARY, WHILE MAINTAINING FUNCTIONALITY OF THE SYSTEM AT ALL TIMES THROUGHOUT CONSTRUCTION. MODIFICATIONS TO THE EXISTING SYSTEM MAY INCLUDE REMOVAL AND CAP, HORIZONTAL AND/OR VERTICAL ADJUSTMENT OF SERVICE LINES, SPRINKLER HEADS, JUNCTION BOXES, AND OTHER IRRIGATION SYSTEM COMPONENTS TO MAINTAIN FUNCTIONALITY OF THE SYSTEM THROUGH ALL UNDISTURBED AREAS AS NEEDED. COORDINATE WITH THE OWNER PRIOR TO MODIFYING IRRIGATION SYSTEM.
2. THE CONTRACTOR, AT COMPLETION OF CONSTRUCTION OR DURING LANDSCAPING OPERATIONS, SHALL MODIFY THE IRRIGATION SYSTEM TO PROVIDE COVERAGE ACROSS ALL IRRIGATED SOD AND TO PREVENT SPRINKLER HEADS FROM PASSING OVER ANY PAVED AREAS. COORDINATE WITH THE OWNER DURING SPRINKLER MODIFICATION.
3. IRRIGATION CONTRACTOR TO PROVIDE DESIGN/BUILD IRRIGATION SYSTEM FOR AREAS TO BE IRRIGATED. IRRIGATION SYSTEM DRAWINGS SHALL BE SUBMITTED TO THE ARCHITECT/ENGINEER AND OWNER FOR THEIR RECORDS.
4. ALL SODDED AREAS, PLANTING BEDS, AND INTERIOR ISLANDS WITHIN THE LIMITS OF THE PROJECT SHALL BE IRRIGATED. CONTRACTOR SHALL REFER TO "LIMITS OF IRRIGATION" – THIS SHEET.
5. CONTRACTOR TO COORDINATE LOCATION OF EXISTING VALVES, TIMERS AND HEADS WITH OWNER.

IRRIGATION SPECIFICATIONS

1. WITHIN THE LIMITS OF THE PROPOSED LANDSCAPED AREAS SHOWN ON THIS PLAN, CONTRACTOR SHALL PROVIDE A FULLY AUTOMATIC OPERATIONAL IRRIGATION SYSTEM. THE COMPLETED PRESSURIZED SYSTEM (INCLUDING WATER SUPPLY, PUMPS, BACKFLOW PREVENTER, DRAIN VALVE, MAINLINE, VALVES, LATERALS, HEADS, CONTROLLER, AND WIRING) SHALL PROVIDE 100% "HEAD TO HEAD" COVERAGE TO ALL PROPOSED LAWN AND 100% WATERING TO MATURE SHRUB ROOT ZONES. COMPLETED SYSTEM SHALL NOT OVERSPRAY ONTO WALKS, PAVEMENT, OR BUILDINGS AND SHALL TAKE WIND INTO CONSIDERATION WHEN CALCULATING FOR THE POTENTIAL FOR OVERSPRAY. THE UNDERGROUND SPRINKLER IRRIGATION SYSTEM SHALL BE DESIGNED AND CONSTRUCTED USING THE SPRINKLER HEADS, VALVES, PIPING, FITTINGS, CONTROLLERS, WIRING, ETC., OF SIZES AND TYPES ADEQUATE FOR THE AREAS SHOWN AND MEETING ALL APPLICABLE CODES AND MANUFACTURER'S RECOMMENDATIONS. ALL EQUIPMENT SHALL BE INSTALLED PER MANUFACTURER'S RECOMMENDATIONS AND STANDARD INSTALLATION PRACTICES. FINISHED IRRIGATION SYSTEM SHALL COMPLY WITH LOCAL PLUMBING CODE.
2. CONTRACTOR SHALL PROVIDE THE OWNER'S REPRESENTATIVE WITH CONSTRUCTION PLANS FOR A FULLY OPERATIONAL IRRIGATION SYSTEM THAT INCLUDES, BUT IS NOT LIMITED TO THE FOLLOWING:
   - 2.1. EXISTING AND PROPOSED SITE CONDITIONS
   - 2.2. STATIC PRESSURE AND PROPOSED GALLONAGE
   - 2.3. EXISTING IRRIGATION EQUIPMENT INCLUDING:
     - 2.3.1. CONTROLLERS AND WIRING
     - 2.3.2. POINT OF CONNECTIONS WITH SIZE
     - 2.3.3. VALVES INCLUDING MAKE, MODEL AND SIZE
     - 2.3.4. IRRIGATION MAINLINES AND LATERALS WITH SIZES
     - 2.3.5. IRRIGATION HEADS INCLUDING MAKE, MODEL AND SIZE
     - 2.3.6. VALVE BOXES AND EQUIPMENT INCLUDING PRESSURE RELEASE VALVES, SHUT–OFF VALVES AND QUICK COUPLING VALVES
     - 2.3.7. GALLONAGE AND WATERING WINDOW OF AFFECTED AREAS
   - 2.4. PROPOSED IRRIGATION EQUIPMENT INCLUDING:
     - 2.4.1.1. CONTROLLERS AND WIRING AND/OR CONNECTIONS TO EXISTING
     - 2.4.1.2. POINT OF CONNECTIONS WITH SIZE
     - 2.4.1.3. VALVES INCLUDING MAKE, MODEL AND SIZE
     - 2.4.1.4. IRRIGATION MAINLINES AND LATERALS WITH SIZES
     - 2.4.2. IRRIGATION HEADS INCLUDING MAKE MODEL AND SIZE
     - 2.4.3. VALVE BOXES AND EQUIPMENT INCLUDING PRESSURE RELEASE VALVES, SHUT–OFF VALVES AND QUICK COUPLING VALVES
     - 2.4.4. GALLONAGE AND WATERING WINDOW OF AFFECTED AREAS
   - 2.5. IRRIGATION PLANS SHALL BE DESIGNED BY THE IRRIGATION CONTRACTOR AND APPROVED BY THE OWNER'S REPRESENTATIVE PRIOR TO INSTALLATION.
3. COORDINATE DESIGNED IRRIGATION NEEDS WITH AVAILABILITY OF WATER FROM SOURCE INCLUDING TIMES AND/OR DATES WATER IS AVAILABLE. VERIFY CONTROLLER NEEDS PRIOR TO SYSTEM DESIGN.
4. COORDINATE LOCATION OF CONTROLLER WITH OWNER. ENSURE DESIGN ALLOWS FOR ADEQUATE DRAINAGE OF SYSTEM, AND ALLOW FOR COMPLETE WINTERIZATION OF SYSTEM. DESIGN SHALL CONSIDER THE NEED FOR CHECK VALVES IN HEADS TO RESTRICT LOW HEAD DRAINAGE IN SYSTEM.
5. CONTRACTOR IS RESPONSIBLE FOR 110V POWER TO CONTROLLERS. ELECTRICAL WIRING SHALL BE INSTALLED ACCORDING TO LOCAL CODE. THE COST OF ALL ELECTRICAL WORK NECESSARY TO MAKE THE AUTOMATIC EQUIPMENT WORK SHALL BE INCLUDED IN THE CONTRACT.
6. SYSTEM DESIGN SHALL FOLLOW INDUSTRY DESIGN STANDARDS INCLUDING TO SIZE PIPE TO MAINTAIN LESS THAN 5 FPS VELOCITY. USE A MINIMUM PIPE SIZE OF 3/4". SLEEVE ALL PIPE UNDER PAVING, WALKS AND ROADWAYS, MINIMIZE PRESSURE LOSS DUE TO FITTINGS AND EXCESSIVELY LONG PIPE RUNS, MAINTAIN MINIMUM PSI FOR PROPER OPERATION AT ALL SPRINKLER HEADS, LOCATE VALVES IN VALVE BOXES NEXT TO WALKWAYS OR OTHER ACCESSIBLE LOCATION OUTSIDE OF SPRINKLER SPRAY, AND CONSTRUCTION SYSTEM TO DESIGNED GRADES AND CONFORM TO SITE AND LANDSCAPE PLANS. WHEN POSSIBLE, CONTRACTOR IS TO CONSOLIDATE IRRIGATION COMPONENTS INTO ONE VALVE BOX INSTEAD OF USING MULTIPLE VALVE BOXES IN THE SAME VICINITY.
7. THROUGHOUT CONSTRUCTION, MAINTAIN ACCURATE AS–BUILT INFORMATION SHOWING ALL INSTALLED MATERIALS. SUBMIT A COPY TO OWNER, OWNER'S REPRESENTATIVE, AND MAINTENANCE STAFF UPON COMPLETION.
8. THE WORK (WHETHER MENTIONED OR NOT) SHALL CONSIST OF ALL LABOR, TOOLS, MATERIALS, TEST, PERMITS AND OTHER RELATED ITEMS NECESSARY FOR THE INSTALLATION AND OPERATION OF THE IRRIGATION SYSTEM.
9. CONTRACTOR MUST BE A BONDED SPRINKLER IRRIGATION CONTRACTOR. THE SPRINKLER IRRIGATION SYSTEM MUST BE SUPERVISED BY A SPRINKLER IRRIGATION TECHNICIAN WITH FIVE (5) YEARS OR MORE OF EXPERIENCE. ALL ELECTRICAL SERVICE CONNECTION WORK MUST BE DONE BY A LICENSED ELECTRICIAN.
10. BEFORE PROCEEDING WITH ANY WORK, THE CONTRACTOR SHALL INSPECT THE SITE, LOCATE ANY EXISTING IRRIGATION SYSTEM AND PUMPING COMPONENTS, CAREFULLY CHECK ALL GRADES AND VERIFY ALL DIMENSIONS AND CONDITIONS AFFECTING THE WORK IN ORDER TO PROCEED SAFELY.
11. PRIOR TO CONSTRUCTION, CONTRACTOR SHALL REPORT TO THE LANDSCAPE ARCHITECT OR OWNER ALL DEVIATION AND/OR CONFLICTS BETWEEN DRAWINGS AND SITE CONDITIONS. EXTRA WORK ARISING FROM FAILURE TO DO SO SHALL BE DONE AT THE CONTRACTOR'S EXPENSE.
12. CONTRACTOR'S STANDARD ONE YEAR WARRANTY SHALL INCLUDE THE FOLLOWING:
    - A.FILLING AND REPAIRING DEPRESSIONS AND REPLACING PLANTINGS DUE TO SETTLEMENT OF IRRIGATION TRENCHES FOR ONE YEAR FOLLOWING ACCEPTANCE OF PROJECT.
    - B.SYSTEM CAN BE ADEQUATELY DRAINED AND BLOWN OUT TO PROTECT FROM FREEZE DAMAGE.
    - C.SYSTEM HAS BEEN ADJUSTED TO SUPPLY PROPER COVERAGE OF AREAS TO RECEIVE WATER.

– DRIP IRRIGATION (MULCHED PLANTING BEDS)

– SPRAY IRRIGATION (TURF GRASS SOD AREAS)

LAMP RYNEARSON
LAMPRYNEARSON.COM
OMAHA, NEBRASKA
14710 W. DODGE RD. STE. 100 (402) 496.2498
NE AUTHORIZATION NO.: CA0135
FORT COLLINS, COLORADO
4715 INNOVATION DR., STE. 100 (970) 226.0342
KANSAS CITY, MISSOURI
9001 STATE LINE RD., STE. 200 (816) 861.0440
MO AUTH. NO.: E-2013011903 | LS-2010043127

0 10' 20'

PROFESSIONAL CIVIL ENGINEER
BRENDAN C. FINDALL
E-20023
10/16/2024
STATE OF NEBRASKA

BRENDAN FINDALL
E-20023

LANDSCAPE IRRIGATION PLAN

WELCH PLAZA – SITE PLAN
DOUGLAS COUNTY, NEBRASKA

811 Know what's below. Call before you dig.

ALL UTILITIES ARE SHOWN BASED ON THE INFORMATION AVAILABLE TO LAMP RYNEARSON. THERE IS NO GUARANTEE ALL FACILITIES ARE SHOWN OR THAT THE LOCATION AND/OR SIZE OF EACH FACILITY IS CORRECT. THE CONTRACTOR IS RESPONSIBLE FOR LOCATING ALL UTILITIES TO CONFIRM THEIR LOCATIONS PRIOR TO CONSTRUCTION.

REVISIONS

DESIGNER / DRAFTER: RICK KELLER
DATE: 10–18–2024
PROJECT NUMBER: 0120156.01–020/320
BOOK AND PAGE:

SHEET
C9.0

L:\Engineering\0120156 17822 Welch Plaza Fee Space Site Plan\DRAWINGS\CONSTRUCTION DRAWINGS\0120156-SITE-LS-CD.dwg, 10/18/2024 1:12:53 PM, BRENDAN FINDALL, LAMP RYNEARSON

SYMBOL LEGEND

PLAN VIEW

- SHEAR WALL
- MASONRY-VENEER
- MASONRY-CMU
- STUD WALL

SECTION / ELEVATION VIEW

- CONCRETE
- FLEXIBLE INSULATION
- GRAVEL
- GROUT
- EARTH / COMPACTED
- PLYWOOD
- EARTH / NONCOMPACTED
- WOOD (FINISH)
- RIGID INSULATION
- MASONRY-CMU FACE
- JOINT FILLER
- MASONRY-CMU
- STEEL
- MASONRY-VENEER
- GYPSUM

REFERENCE LEGEND

WALL TYPE	X	LETTER INDICATES PARTITION OR WALL TYPE
TOILET ACCESSORY	TA-X	TOILET ACCESSORY NUMBER
EQUIPMENT NUMBER	XXXX	EQUIPMENT NUMBER
WINDOW DESIGNATION	XX	WINDOW DESIGNATION
DOOR NUMBER	101	DOOR NUMBER
ROOM NUMBER	ROOM NAME 101 150 SF	ROOM NAME DESIGNATION ROOM NUMBER DESIGNATION ROOM AREA DESIGNATION
REFERENCE DEMOLITION NOTE	DX	DEMOLITION DESIGNATION
REFERENCE NOTE	X	REFERENCE DESIGNATION
ROOM / FRAMING ELEVATION	1 XX-XX	ELEVATION LETTER DIRECTION OF VIEW SHEET NUMBER
EXTERIOR ELEVATION	1 XX-XX	DIRECTION OF VIEW ELEVATION LETTER SHEET NUMBER
PLAN DETAIL	X XX-XX	DETAIL NUMBER SHEET NUMBER
SECTION/ DETAIL	SIM X XX-XX	SECTION/DETAIL NUMBER SHEET NUMBER INDICATES DIRECTION OF VIEW
NEW COLUMN	X	LETTER INDICATES NEW COLUMN LINE
EXISTING COLUMN	X	LETTER INDICATES EXISTING COLUMN LINE
MATCHLINE	AREA A AREA B	
LEVEL	NAME ELEVATION	LEVEL CALLOUT DESIGNATION ELEVATION DESIGNATION
TITLE MARKER	1 VIEW NAME SCALE: 1/8" = 1'-0"	GRAPHIC AREA FOR DRAWING DETAIL NUMBER TITLE SCALE OF THE DRAWING
NORTH ARROW	NORTH / PLAN NORTH / TRUE NORTH	

ABBREVIATIONS

A	COMPRESSED AIR
A/C	AIR CONDITIONING
AB	ANCHOR BOLT
ABS	ACRYLONITRILE BUTAD STYRENE
AC	ALTERNATING CURRENT
ACI	AMERICAN CONCRETE INSTITUTE
ACSR	ALUMINUM CONDUCTOR STEEL REINFORCED
ACST	ACOUSTIC
AD	ACCESS DOOR
AD	AREA DRAIN
ADMIN	ADMIN ADMINISTRATION
AFF	ABOVE FINISH FLOOR
AFFF	AQUEOUS FILM FORMING FOAM
AGG	AGGREGATE
AHU	AIR HANDLING UNIT
AI	AREA INLET
AIC	AMPS INTERRUPTING CAPACITY (SYM RMS)
AISC	AMERICAN INSTITUTE OF STEEL CONSTRUCTION
AL	ACTIVE LEAF
AL	ALUMINUM
ALT	ALTERNATE
AMP	AMPERE
ANSI	AMERICAN NATIONAL STANDARDS INSTITUTE
AP	ACCESS PANEL
APC	ACOUSTICAL PANEL CEILING
APD	AIR PRESSURE DROP
APPD	APPROVED
APPROX	APPROXIMATE
ARCH	ARCHITECTURAL OR ARCHITECT
ARI	AMERICAN REFRIGERATION INSTITUTE
ASB	ASBESTOS
ASPH	ASPHALT
AUTO	AUTOMATIC
AV	ACID VENT
AVG	AVERAGE
AW	ACID WASTE
AWC	ACOUSTICAL WALL COVERING
AWG	AMERICAN WIRE GAUGE
L	ANGLE
BATT	BATT INSULATION
BB	BULLETIN BOARD
BBO	BOILER BLOW OFF
BC	BOOKCASE
BD	BOARD
BDY	BOUNDARY
BEJ	BRICK EXPANSION JOINT
BIT	BITUMINOUS
BKR	BREAKER
BL	BUILDING LINE
BLDG	BUILDING
BLK	BLOCK
BLKG	BLOCKING
BM	BEAM
BM	BENCH MARK
BO	BOTTOM OF
BOT	BOTTOM
BRCG	BRACING
BRDG	BRIDGING
BRG	BEARING
BRK	BRICK
BRKT	BRACKET
BS	BOTH SIDES
BTU	BRITISH THERMAL UNIT
BTUH	BTU PER HOUR
BUR	BUILT-UP ROOFING
BW	BOTH WAYS
C	CENTER
C OR CND	CONDUIT (ELECTRICAL SHEETS)
C TO C	CENTER TO CENTER
CAP	CAPACITY
CB	CATCH BASIN (OR CIRCUIT BREAKER)
CBU	CEMENTITIOUS BACKER UNIT
CC	CENTER TO CENTER
CCT	CIRCUIT
CD	CONDENSATE DRAIN
CE	COVER ELEVATION
CEM	CEMENT
CF	CUBIC FEET
CFH	CUBIC FEET PER HOUR
CFM	CUBIC FEET PER MINUTE
CHIM	CHIMNEY
CI	CAST IRON
CI	CURB INLET
CIP	CAST IN PLACE
CIR	CIRCULAR
CJ	CONTROL JOINT
CKT	CIRCUIT
CL	CENTER LINE
CL WG	CLEAR WIRE GLASS
CLG	CEILING
CLKG	CAULKING
CLO	CLOSET
CMP	CORRUGATED METAL PIPE
CMU	CONCRETE MASONRY UNIT
CNTR	COUNTER
CO	CLEAN OUT
CO2	CARBON DIOXIDE
COL	COLUMN
COM	COMMON
COMB	COMBINATION
COMB	COMBUSTION
COMP	COMPRESSIBLE
COMPR	COMPRESSOR
CONC	CONCRETE
CONF	CONFERENCE
CONN	CONNECTION
CONSTR	CONSTRUCTION
CONSTR JT	CONSTRUCTION JOINT
CONT	CONTINUOUS (CONTINUATION)
CONTR	CONTRACTOR
COR	CORNER
CORR	CORRIDOR
COV	COVERED
CPL	CEMENT PLASTER
CPS	CYCLES PER SECOND (HERTZ)
CPT	CARPET
CR	CONDENSER WATER RETURN
CRES	CORROSIVE RESISTANT STEEL
CRG	CARRIAGE
CRSE	COURSE
CS	CONDENSER WATER SUPPLY
CS	COUNTER SINK
CSMT	CASEMENT
CT	CERAMIC TILE
CT	CURRENT TRANSFORMER
CTL	CARPET TILE
CU	CONDENSING UNIT
CU YD	CUBIC YARDS
CUH	CABINET UNIT HEATER
CV	CEILING VENT
CW	COLD WATER
CWR	CHILLED WATER RETURN
CWS	CHILLED WATER SUPPLY
CYL	CYLINDER
D	DEPTH (DEEP)
D	DIFFUSER
d	PENNY (as in nail - 10d)
D&M	DRESSED AND MATCHED
DA	DOUBLE ACTING
DB	DRY BULB
dB	DECIBEL
DBL	DOUBLE
DC	DIRECT CURRENT
DCJ	DOWELED CONTROL JOINT
DCJT	DUMMY CONTROL JOINT
DCL	DOOR CLOSER
DCW	DOMESTIC COLD WATER
DEG	DEGREE
DEMO	DEMOLITION
DEPR	DEPRESSION
DEPT	DEPARTMENT
DET	DETAIL
DF	DRINKING FOUNTAIN
DH	DOUBLE HUNG
DHW	DOMESTIC HOT WATER
DI	DEIONIZED WATER
DIA	DIAMETER
DIAG	DIAGONAL
DIM	DIMENSION
DIP	DUCTILE IRON PIPE
DISC	DISCONNECT
DIST	DISTRIBUTION
DL	DEAD LOAD
DMPR	DAMPER
DN	DOWN
DP	DAMP PROOFING
DPT	DEW POINT
DR	DOOR
DRN	DRAIN
DS	DOWN SPOUT
DV	DENTAL VACUUM
DWG	DRAWING
DWLS	DOWELS
DX	DIRECT EXPANSION
E	EAST
EA	EACH
EA	EXHAUST AIR
EDH	ELECTRIC DUCT HEATER
EER	ENERGY EFFICIENCY RATIO
EJ	EXPANSION JOINT
EL OR ELEV	ELEVATION - GRADE OR
ELEV	BUILDING
ELEC	ELECTRIC OR ELECTRICAL
ELEV	ELEVATOR
ENCL	ENCLOSURE
ENT	ENTERING
ENT	ENTRANCE
EQ	EQUAL
EQUIP	EQUIPMENT
ES	EACH SIDE
EST	ESTIMATE
EVAP	EVAPORATOR
EW	EACH WAY
EWC	ELECTRIC WATER COOLER
EXC	EXCAVATE
EXD	EXIT DEVICE
EXH	EXHAUST
EXIST	EXISTING
EXP	EXPOSED
EXPL	EXPLOSION
EXPN	EXPANSION
EXT	EXTERIOR
F	FAHRENHEIT
F	FIRE
FA	FRESH AIR
FCG	FACING
FD	FLOOR DRAIN
FDN	FOUNDATION
FE	FIRE EXTINGUISHER
FEB	FIRE EXTINGUISHER BRACKET
FEC	FIRE EXTINGUISHER CABINET
FH	FIRE HYDRANT
FHC	FIRE HOSE CABINET
FIG	FIGURE
FIN	FINISH
FIX	FIXTURE
FL or FLR	FLOOR
FLASH	FLASHING
FLEX	FLEXIBLE
FLG	FLANGE
FLG	FLOORING
FLUOR	FLUORESCENT
FP	FIRE PROTECTION
FPM	FEET PER MINUTE
FPRF	FIRE PROOF
FR	FRAME
FR	FIRE RATED
FRG	FURRING
FS	FAR SIDE
FS	FLOOR SINK
FS	FULL SIZE
FT	FEET (FOOT)
FTG	FOOTING
FV	FIELD VERIFY
FWC	FABRIC WALL COVERING
G	GRILLE
G	NATURAL GAS
GA	GAGE OR GAUGE
GAL	GALLON
GALV	GALVANIZED
GEN	GENERAL
GFE	GOVERNMENT FURNISHED EQUIPMENT
GFE/CI	GOVERNMENT FURNISHED EQUIPMENT/CONTRACTOR INSTALLED
GFI	GROUND FAULT INTERRUPTER
GI	GALVANIZED IRON
GL	GLASS
GND	GROUND
GOVT	GOVERNMENT
GPH	GALLONS PER HOUR
GPM	GALLONS PER MINUTE
GR	GRADE
GRS	GALVANIZED RIGID STEEL CONDUIT
GRTG	GRATING
GSU	GLAZED STRUCTURAL UNITS
GWB	GYPSUM WALLBOARD
GWT	GLAZED WALL TILE
GYP	GYPSUM
H or HT	HEIGHT (HIGH)
HB	HOSE BIBB
HBD	HARDBOARD
HC	HANDICAPPED
HD	HEAD
HDPE	HIGH DENSITY POLYETHYLENE
HDR	HEADER
HDW	HARDWARE
HIP	HIGH PRESSURE
HM	HOLLOW METAL
HORIZ	HORIZONTAL(LY)
HP	HORSE POWER
HPS	HIGH PRESURE STEAM
HPT	HIGH POINT
HR	HOUR
HS	HIGH STRENGTH
HSGYP	HIGH STRENGTH GYPSUM PLASTER
HTG	HEATING
HTR	HEATER
HW	HEAD WALL
HW	HOT WATER
HWH	HOT WATER HEATER
HWR	HOT WATER RETURN (HEATING)
HWS	HOT WATER SUPPLY (HEATING)
HYD	HYDRAULIC
I or FE	IRON
IC	INTERCOM
ID	INSIDE DIAMETER
IE	INVERT ELEVATION
IES	ILLUMINATING ENGINEERING SOCIETY
IN	INCH
INSUL	INSULATION
INT	INTERIOR
INV	INVERT OR INVERTER
IP	IRON PIPE
ISF	INSIDE FACE
JB	JUNCTION BOX
JBOX	JUNCTION BOX
JC	JANITOR CLOSET
JCT	JUNCTION
JST	JOIST
JT	JOINT
K	KEY
KCP	KEENE'S CEMENT PLASTER
KIP or K	KILOPOUND (1000 LBS)
KIT	KITCHEN
KL	KEY LOCK
KP	KICK PLATE
KV	KILOVOLTS
KVA	KILOVOLT AMPERES
KW	KILOWATT
LAB	LABORATORY
LAU	LAUNDRY
LAV	LAVATORY
LBR	LUMBER
LBS	POUNDS
LD	LOAD
LDG	LOADING
LE	LEFT END
LG	LENGTH (LONG)
LIN	LINEAR
LIS	LAWN IRRIGATION SYSTEM
LL	LIVE LOAD
LLBB	LONG LEG BACK TO BACK
LLH	LONG LEG HORIZONTAL
LLV	LONG LEG VERTICAL
LNTL	LINTEL
LP	LOW POINT
LPG	LIQUIFIED PETROLEUM GAS
LPS	LOW PRESSURE STEAM
LR	LIVING ROOM
LS	LAWN SPRINKLER
LT	LIGHT
LT WT	LIGHT WEIGHT
LTG	LIGHTING
LVT	LUXURY VINYL TILE
M	MIDDLE
M	THOUSAND
M & B	MATCHED AND BEADED
MA	MAKE-UP AIR
MACH	MACHINE
MAS	MASONRY
MAT or MATL	MATERIAL
MAX	MAXIMUM
MB	MACHINE BOLT
MBH	1000 BTUH
MC	MEDICINE CABINET
MC	MISCELLANEOUS CHANNELS
MECH	MECHANICAL
MER	MECHANICAL EQUIPMENT ROOM
MET	METAL
MFG	MANUFACTURING
MFR	MANUFACTURER
MH	MANHOLE
MIN	MINIMUM
MISC	MISCELLANEOUS
ML	METAL LATH
MLDG	MOULDING
MO	MASONRY OPENING
MONO	MONOLITHIC
MT	METAL THRESHOLD
MTD	MOUNTED
N	NORTH
NC	NORMALLY CLOSED
NEC	NATIONAL ELECTRICAL CODE
NEMA	NATIONAL ELECTRICAL MANUFACTURERS ASSOCIATION
NFPA	NATIONAL FIRE PROTECTION ASSOCIATION
NIC	NOT IN CONTRACT
NO	NORMALLY OPEN
NO	NUMBER
NR	NOT REQUIRED
NS	NEAR SIDE
NTS	NOT TO SCALE
OA	OUTSIDE AIR
OB WG	OBSCURE WIRE GLASS
OBGL	OBSCURE GLASS
OBSC	OBSCURE
OC	ON CENTER(S)
OCEW	ON CENTER EACH WAY
OD	OUTSIDE DIAMETER
OFF	OFFICE
OH	OVERHEAD
OPNG	OPENING
OPP	OPPOSITE
OPS	OPERATIONS
OS & Y	OUTSIDE SCREW & YOKE
OSF	OUTSIDE FACE
OV	OVERFLOW VALVE
OX	OXYGEN
OZ	OUNCE
P	PAINT
PA	PUBLIC ADDRESS
PBS	PUSH BUTTON STATION
PC	PIECE
PC	POINT OF CURVATURE
PC	PRECAST
PCC	PORTLAND CEMENT CONCRETE
PCT	PORCELAIN CERAMIC TILE
PD	PRESSURE DROP
PE	POLYETHYLENE
PEN	PENETRATION
PERF	PERFORATED
PH	PHASE
PHAR	PHARMACY
PI	POINT OF INTERSECTION
PIV	POST INDICATING VALVE
PL or P	PLATE
PLAM	PLASTIC LAMINATE
PLAS	PLASTER
PLATF	PLATFORM
PLBG	PLUMBING
PLG	PILING
PLWD	PLYWOOD
PNL	PANEL
POL	POLISH(ED)
PORC	PORCELAIN
PPM	PARTS PER MILLION
PR	PAIR
PREFAB	PREFABRICATED
PREFIN	PREFINISHED
PRESS	PRESSURE
PROJ	PROJECT
PRV	PRESSURE REGULATING VALVE
PS	PRESSED STEEL
PSFT	POUNDS PER SQUARE FOOT
PSI	POUNDS PER SQUARE INCH
PT	POINT
PT	POINT OF TANGENCY
PTD	PAINTED
PTN	PARTITION
PVC	POLYVINYL-CHLORIDE
PVMT	PAVEMENT
PW	PASS WINDOW
1/4 RD	QUARTER ROUND
QT	QUARRY TILE
QT	QUART
QTRS	QUARTERS
QTY	QUANTITY
QTZ	QUARTZ
R	REGISTER
R	RISER
RA	RETURN AIR
RAD OR R	RADIUS
RB	RESILIENT BASE
RC	REMOTE CONTROL
RCP	REINFORCED CONCRETE PIPE
RD	ROOF DRAIN
RE	RIGHT END
REC	RECEIVER
RECP	RECEPTACLE
RECR	RECREATION
RECT	RECTIFIER
REF	REFERENCE
REFR	REFRIGERANT
REFR	REFRIGERATOR
REG	REGISTER
REINF	REINFORCEMENT
REM	REMOVE(ABLE)
REQD	REQUIRED
RESIL	RESILIENT
REV	REVISIONS
RFG	ROOFING
RH	RELATIVE HUMIDITY
RL	REFRIGERANT LIQUID
RM	ROOM
RND	ROUND
RO	ROUGH OPENING
RPM	REVOLUTIONS PER MINUTE
RT	RUBBER TILE
RTU	ROOF TOP UNIT
RUB	RUBBER
S	SOUTH
SA	SUPPLY AIR
SAN	SANITARY
SB	SECURITY BARS
SB	SPLASH BLOCK
SCH	SCHEDULE
SCHED	SCHEDULE
SCR	SCREW
SCT	STRUCTURAL CLAY TILE
SCUT	SCUTTLE
SCW	SOFT COLD WATER
SD	STORM DRAIN
SD	SUBDRAIN
SDI	STEEL DECK INSTITUTE
SECT	SECTION
SECY	SECRETARY
SEQ	SEQUENCE
SF	SQUARE FOOT (FEET)
SFU	STRUCTURAL FACING UNIT
SHLD	SHOULDER
SHT	SHEET
SHTG	SHEATHING
SHW	SOFT HOT WATER
SIM	SIMILAR
SJI	STEEL JOIST INSTITUTE
SL	SNOW LOAD
SLBB	SHORT LEG BACK TO BACK
SM	SPRINKLER MAIN
SOV	SHUT OFF VALVE
SPA	SPACE(ING)
SPEC	SPECIFICATIONS
SPF	SOUNDPROOF
SPH	SPACE HEATER
SPKR	SPEAKER
SPL	SPECIAL
SQ	SQUARE
SS	SANITARY SEWER
SS	STAINLESS STEEL
SSMR	STANDING SEAM METAL ROOFING
STA	STATION
STAIR	STAIRWAY
STC	SOUND TRANSMISSION COEFFICIENT
STD	STANDARD
STGR	STRINGER
STIFF	STIFFENER
STIRR	STIRRUPS
STL	STEEL
STN	STONE
STOR	STORAGE
STR	STRUCTURAL
SUB FL	SUB FLOOR
SUCT	SUCTION
SUSP	SUSPENDED
SVF	SHEET VINYL FLOORING
SW	SWITCH
SWBD	SWITCH BOARD
SYM	SYMMETRICAL
T	TREAD
T or TLT	TOILET
TAN	TANGENT
TBD	TACK BOARD
TE	TOP ELEVATION
TEL	TELEPHONE
TEMP	TEMPERATURE
TER	TERRAZZO
TERM	TERMINAL
TGL	TOGGLE
TH	THRESHOLD
THK	THICK
THRD	THREAD
TO	TOP OF
TOB	TOP OF BEAM
TOC	TOP OF CONCRETE
TOF	TOP OF FOOTING
TOJ	TOP OF JOIST
TOPO	TOPOGRAPHIC
TOS	TOP OF STEEL
TOW	TOP OF WALL
TRANS	TRANSVERSE
TSTAT	THERMOSTAT
TV	TELEVISION
TW	TEMPERED WATER
TWR	TEMPERED WATER RETURN
TYP	TYPICAL
U/C	UNDER CABINET
UC	UNIT COOLER
UG	UNDERGROUND
UH	UNIT HEATER
UL	UNDERWRITERS LABORATORIES
UNEX	UNEXCAVATED
UNFIN	UNFINISHED
UNO	UNLESS NOTED OTHERWISE
UPS	UNINTERRUPTIBLE POWER SYSTEM
UR	URINAL
UT	UTILITY
UV	UNIT VENTILATOR
V	VOLT
VAC	VACUUM
VAV	VARIABLE AIR VOLUME
VCP	VITRIFIED CLAY PIPE
VCT	VINYL COMPOSITION TILE
VD	VAULT DOOR
VEL	VELOCITY
VENT	VENTILATOR(ION)
VERT	VERTICAL
VEST	VESTIBULE
VFD	VARIABLE FREQUENCY DRIVE
VOL	VOLUME
VPC	VERTICAL POINT OF CURVATURE
VPI	VERTICAL POINT OF INTERSECTION
VPT	VERTICAL POINT OF TANGENCY
VS	VENT STACK
VT	VINYL-TILE
VTR	VENT THRU ROOF
VWC	VINYL WALL COVERING
W	WEST
W	WIDE (WIDTH)
W	WIRE
W/	WITH
W/O	WITHOUT
WB	WET BULB
WC	WATER CLOSET
WC	WATER COLUMN
WD	WASTE DRAIN
WD	WOOD
WD BLKG	WOOD BLOCKING
WD DR	WOOD DOOR
WDW	WINDOW
WF	WIDE FLANGE
WG	WIRE GLASS
WH	WALL HYDRANT
WHT	WHITE
WI	WROUGHT IRON
WKSH	WORK SHOP
WL	WIND LOAD
WNSCT	WAINSCOT
WP	WEATHER PROOF
WP	WORK POINT
WPF	WATER PROOF
WPFG	WATER PROOFING
WRB	WARDROBE
WS	WASTE STACK
WT	WEIGHT
WWF	WELDED WIRE FABRIC
WWM	WOVEN WIRE MESH
XFMR	TRANSFORMER
YD	YARD or YARD DRAIN

GENERAL NOTES

A. ALL CONTRACTORS ARE RESPONSIBLE FOR REVIEWING ENTIRE SET OF DOCUMENTS TO DETERMINE THEIR FULL SCOPE OF WORK. CONTRACTOR SHALL NOT BE ALLOWED EXTRA COSTS DUE TO FAILURE TO REVIEW ENTIRE SET OF DOCUMENTS.

B. CONTRACTOR SHALL TAKE ALL MEASUREMENTS FOR WORK AND BE RESPONSIBLE FOR SAME. CONTRACTOR SHALL ADJUST FOR ACTUAL FIELD CONDITIONS AT NO ADDITIONAL EXPENSE TO OWNER. COORDINATE THE WORK AND SHOP DRAWINGS WITH ALL OTHER TRADES AFFECTED.

C. BUILDING ELEVATION 1234.80' ON THE SITE PLAN EQUALS ELEVATION 100'-0" ON THE ARCHITECTURAL PLANS.

D. DIMENSIONS ARE TYPICALLY TO FINISH FACE OF MASONRY, CONCRETE, GYPSUM WALL BOARD, AND METAL FRAMES; OR CENTER LINE OF COLUMN OR BEAMS, UNLESS NOTED OTHERWISE.

E. ALL ANGLES ON THE FLOOR PLANS ARE 45 OR 90 DEGREES UNLESS OTHERWISE INDICATED.

F. ALL STEEL STUDS ADJACENT TO STEEL COLUMNS SHALL BE HELD A 1/2 INCH AWAY FROM STEEL COLUMNS.

G. ALL CONTROL JOINTS (CJ) SHALL BE CAULKED AT EXTERIOR WALL LOCATIONS AND RAKED BACK 3/4 INCH AT ALL INTERIOR JOINTS UNLESS OTHERWISE NOTED.

H. WHERE METAL STUDS EXTEND TO THE STRUCTURE ABOVE, PROVIDE DOUBLE HEAD TRACK TO ALLOW SLIPPAGE TO COMPENSATE FOR DEFLECTION OF THE STRUCTURE ABOVE. SEE DETAILS 2 AND 3/A101.

J. CONTRACTOR SHALL VERIFY CMU WALLS HAVE NO CHIPPED EDGES AND THAT JOINTS HAVE BEEN TOOLED TO REMOVE ALL EXCESS MORTAR AND ARE READY TO RECEIVE PAINT. CONTRACTOR SHALL APPROVE WALLS TO RECEIVE PAINT PRIOR TO HAVING PAINTER INSPECT FOR APPROVAL.

K. SEE SHEET A301 FOR DOOR AND ROOM FINISH SCHEDULES.

L. SEE SHEET A101 FOR PARTITION TYPES AND NOTES.

REF. NOTES (X)

PROJECT ARCHITECTURAL REFERENCED NOTES

1. STRUCTURAL STOOP, SEE STRUCTURAL.
2. STRUCTURAL COLUMN, SEE STRUCTURAL.
3. 30X36 ROOF HATCH. SEE DETAIL 5/A103.
4. NO CONCRETE IN THIS AREA.
5. GAS METER MANIFOLD. SEE MECHANICAL.
6. CONCRETE FILLED, STL PIPE BOLLARD, TYP. SEE DETAIL 2/A101
7. MAPES ALUMINUM CANOPY. SEE SPECS.
8. FLOOR DRAIN. SEE PLUMBING.
9. ELEC EQUIPMENT. SEE ELECTRICAL.

ARCHITECTURAL SHEET LIST

DESIGNED:	NJB	ISSUE DATE:	10/18/2024
DRAWN:	NJB	REVISIONS:	
CHECKED:	DJK	No.: DATE: BY: DESCRIPTION:	

ARCHITECT DANIEL J. KERNS A4653 10/18/24 STATE OF NEBRASKA

SCHEMMER
Design with Purpose. Build with Confidence.
1044 North 115th Street, Suite 300, Omaha, Nebraska 68154 | 402.493.4800
CA0666

LANOHA DEVELOPMENT
HAWTHORNE COURT MULTI-TENANT BUILDING
17662 WELCH PLAZA
OMAHA, NE 68154
ARCHITECTURAL INFO SHEET

PROJECT NO.: 010347.001

A 00

SECTION 042200 – CONCRETE UNIT MASONRY

PART 1 - GENERAL
1.1 SUMMARY
A. Section Includes:
1. Standard concrete masonry units.
2. Decorative concrete masonry units.
1.2 ACTION SUBMITTALS
A. Product Data: For each type of product.
B. Shop Drawings: For reinforcing steel. Detail bending, lap lengths, and placement of unit masonry reinforcing bars. Comply with ACI 315.
1.3 INFORMATIONAL SUBMITTALS
A. Mix Designs: For each type of mortar and grout. Include description of type and proportions of ingredients.
1. Include test reports for mortar mixes required to comply with property specification. Test according to ASTM C 109/C 109M for compressive strength, ASTM C 1506 for water retention, and ASTM C 91/C 91M for air content.
2. Include test reports, according to ASTM C 1019, for grout mixes required to comply with compressive strength requirement.
1.4 FIELD CONDITIONS
A. Cold-Weather Requirements: Do not use frozen materials or materials mixed or coated with ice or frost. Do not build on frozen substrates. Remove and replace unit masonry damaged by frost or by freezing conditions. Comply with cold-weather construction requirements contained in TMS 602/ACI 530.1/ASCE 6.
B. Hot-Weather Requirements: Comply with hot-weather construction requirements contained in TMS 602/ACI 530.1/ASCE 6.

PART 2 - PRODUCTS
2.1 UNIT MASONRY, GENERAL
A. Masonry Standard: Comply with TMS 602/ACI 530.1/ASCE 6, except as modified by requirements in the Contract Documents.
2.2 CONCRETE MASONRY UNITS
A. Shapes: Provide shapes indicated and as follows, with exposed surfaces matching exposed faces of adjacent units unless otherwise indicated.
1. Provide special shapes for lintels, corners, jambs, sashes, movement joints, headers, bonding, and other special conditions.
B. Integral Water Repellant: Provide units made with integral water repellent for exposed units and where indicated.
1. Manufacturers: Subject to compliance with requirements, provide products by one of the following:
a. ACM Chemistries.
b. ASF Corporation; Constructions Systems.
c. Euclid Chemical Company (The); an RPM Company
d. GCP Applied Technologies Inc. (formerly Grace Construction Products)
e. Moxie International
C. CMUs: ASTM C 90
1. Density Classification: Normal Weight
D. Decorative CMUs: ASTM C 90
1. Density Classification: Normal Weight
2. Pattern and Texture:
a. Split-face cmu, color to be selected by Architect. See Exterior Finish Schedule on A201.
E. Quik-Brik by Echelon Masonry: ASTM C 90
1. Density Classification: Normal Weight
2. Pattern and Texture:
a. See Exterior Finish Schedule on A201
2.3 MORTAR AND GROUT MATERIALS
A. Portland Cement: ASTM C 150/C 150M, Type I or II, except Type III may be used for cold-weather construction. Provide natural color or white cement as required to produce mortar color indicated.
B. Mortar Pigments: Natural and suthetic iron oxides and chromium oxides, compounded for use in mortar mixes and complying with ASTM C 979/C 979M. Use only pigments with a record of satisfactory performance in masonry mortar.
1. Manufacturers: Subject to compliance with requirements, provide products by one of the following:
a. Davis Colors.
b. Euclid Chemical Company (The); an RPM company.
c. Lanxess Corporation.
d. Solomon Colors, Inc.
C. Colored Cement Products: Packaged blend made from portland cement and hydrated lime and mortat pigments, all complying with specific requirements, and containing no other ingredients.
1. Colored Portland Cement-Line Mix:
a. Manufacturers: Subject to compliance with requirements, provide products by one of the following:
1) Essroc.
2) Holcim (US) Inc.
3) Lafarge North America Inc.
4) Lehigh Hanson; Heidelberg Cement Group
2.4 EMBEDDED FLASHING MATERIALS
A. Single-Wythe CMU Flashing System: System of CMU cell flashing pans and interlocking CMU web covers made from UV-resistant, high-density polyethylene. Cell flashing pans have integral weep spouts designed to be built into mortar beds that extend intot he cell to prevent clogging with mortar.
1. Manufacturers: Subject to compliance with requirements, provide products by one of teh following.
a. Mortar Net.
2.5 MISCELLANEOUS MASONRY ACCESSORIES
A. Preformed Control-Joint Gaskets: Made from styrene-butadiene-rubber compound, complying with ASTM D 2000, Designation M2AA-805 or PVC, complying with ASTM D 2287, Type PVC-65406 and designed to fit standard sash block and to maintain lateral stability in masonry wall; size and configuration as indicated.
2.6 MORTAR AND GROUT MIXES
A. Mortar for Unit Masonry: Comply with ASTM C 270, Proportion Specification. See Structural General Notes.
B. Pigmented Mortat: Use colored cement product or select and proprtional pigments with other ingredients to produce color required. Do not add pigments to colored cement products.
1. Pigments shall not exceed 10 percent of portland cement by weight.
2. Pigments shall not exceed 5 percent of masonry cement by weight.
3. Application: Use pigmented mortar for exposed mortar jointswith the following units:
a. Decorative CMUs.
C. Grout for Unit Masonry: Comply with ASTM C 476. See Structural General Notes.

PART 3 - EXECUTION
3.1 LAYING MASONRY WALLS
A. Lay out walls in advance for accurate spacing of surface bond patterns with uniform joint thicknesses and for accurate location of openings, movement-type joints, returns, and offsets. Avoid using less-than-half-size units, particularly at corners, jambs, and, where possible, at other locations.
B. Bond Pattern for Exposed Masonry: Unless otherwise indicated, lay exposed masonry in running bond; do not use units with less-than-nominal 4-inch horizontal face dimensions at corners or jambs.
3.2 REINFORCED UNIT MASONRY INSTALLATION
A. Placing Reinforcement: Comply with requirements in TMS 602/ACI 530.1/ASCE 6.
B. Grouting: Do not place grout until entire height of masonry to be grouted has attained enough strength to resist grout pressure.
1. Comply with requirements in TMS 602/ACI 530.1/ASCE 6 for cleanouts and for grout placement, including minimum grout space and maximum pour height.
2. Limit height of vertical grout pours to not more than 60 inches.
3.3 FIELD QUALITY CONTROL
A. Testing and Inspecting: Owner will engage special inspectors to perform tests and inspections and prepare reports. Allow inspectors access to scaffolding and work areas as needed to perform tests and inspections. Retesting of materials that fail to comply with specified requirements shall be done at Contractor's expense.
3.4 REPAIRING, POINTING, AND CLEANING
A. In-Progress Cleaning: Clean unit masonry as work progresses by dry brushing to remove mortar fins and smears before tooling joints.
B. Final Cleaning: After mortar is thoroughly set and cured, clean exposed masonry as follows:
1. Test cleaning methods on sample wall panel; leave one-half of panel uncleaned for comparison purposes.
2. Clean concrete masonry by applicable cleaning methods indicated in NCMA TEK 8-4A.
3.5 MASONRY FILL INSULATION
A. Install insulation in masonry unit cells of exterior walls.
B. Foamed-in-place insulation:
1. Confirm that selected foam insulation material is compatible and non-detrimental to referenced fire resistance assemblies before use.
2. Installer shall be certified and/or approved by manufacturer of insulation. Install foam insulation in strict accordance with manufacturer's published instructions.
3. Pump foam insulation bored into mortar joints around entire wall area 3 feet from floor level. Repeat at height no greater than 10 feet untill completion of wall area.
4. Plug holes with mortar after completion.

END OF SECTION

SECTION 055000 - METAL FABRICATIONS

PART 1 - GENERAL
1.1 SUMMARY
A. Section Includes:
1. Miscellaneous steel framing and supports.
2. Metal bollards.
3. Misc. steel fabrications.
B. Products furnished, but not installed, under this Section include the following:
1. Anchor bolts, slotted-channel inserts, and wedge-type inserts indicated to be cast into concrete.
C. Shop Drawings: Show fabrication and installation details. Include plans, elevations, sections, and details of metal fabrications and their connections. Show anchorage and accessory items.

PART 2 - PRODUCTS
2.1 METALS
A. Metal Surfaces, General: Provide materials with smooth, flat surfaces unless otherwise indicated. For metal fabrications exposed to view in the completed Work, provide materials without seam marks, roller marks, rolled trade names, or blemishes.
B. Steel Plates, Shapes, and Bars: ASTM A 36/A 36M.
C. Steel Tubing: ASTM A 500/A 500M, cold-formed steel tubing.
D. Steel Pipe: ASTM A 53/A 53M, Standard Weight (Schedule 40) unless otherwise indicated.
2.2 FASTENERS
A. General: Unless otherwise indicated, provide zinc-plated fasteners with coating complying with ASTM B 633 or ASTM F 1941/1941M, Class Fe/Zn 5, at exterior walls. Select fasteners for type, grade, and class required.
B. Cast-in-Place Anchors in Concrete: Either threaded type or wedge type unless otherwise indicated; galvanized ferrous castings, either ASTM A 47/A 47M malleable iron or ASTM A 27/A 27M cast steel. Provide bolts, washers, and shims as needed, all hot-dip galvanized per ASTM F 2329.
C. Post-Installed Anchors: Torque-controlled expansion anchors or chemical anchors.
1. Material for Interior Locations: Carbon-steel components zinc plated to comply with ASTM B 633 or ASTM F 1941/1941M, Class Fe/Zn 5, unless otherwise indicated.
2.3 MISCELLANEOUS MATERIALS
A. Universal Shop Primer: Fast-curing, lead- and chromate-free, universal modified-alkyd primer complying with MPI#79 and compatible with topcoat.
1. Use primer containing pigments that make it easily distinguishable from zinc-rich primer.
B. Nonshrink, Nonmetallic Grout: Factory-packaged, nonstaining, noncorrosive, nongaseous grout complying with ASTM C 1107/C 1107M. Provide grout specifically recommended by manufacturer for interior and exterior applications.
2.4 METAL BOLLARDS
A. Fabricate metal bollards from Schedule 40 steel pipe.
B. Prime bollards with zinc-rich primer.
2.5 STEEL AND IRON FINISHES
A. Preparation for Shop Priming: Prepare surfaces to comply with SSPC-SP 6/NACE No. 3, "Commercial Blast Cleaning."
B. Shop Priming: Apply shop primer to comply with SSPC-PA 1, "Paint Application Specification No. 1: Shop, Field, and Maintenance Painting of Steel," for shop painting.

PART 3 - EXECUTION
3.1 INSTALLATION, GENERAL
A. Cutting, Fitting, and Placement: Perform cutting, drilling, and fitting required for installing metal fabrications. Set metal fabrications accurately in location, alignment, and elevation; with edges and surfaces level, plumb, true, and free of rack; and measured from established lines and levels.
B. Fit exposed connections accurately together to form hairline joints. Weld connections that are not to be left as exposed joints but cannot be shop welded because of shipping size limitations. Do not weld, cut, or abrade surfaces of exterior units that have been hot-dip galvanized after fabrication and are for bolted or screwed field connections.
C. Field Welding: Comply with the following requirements:
1. Use materials and methods that minimize distortion and develop strength and corrosion resistance of base metals.
2. Obtain fusion without undercut or overlap.
3. Remove welding flux immediately.
4. At exposed connections, finish exposed welds and surfaces smooth and blended so no roughness shows after finishing and contour of welded surface matches that of adjacent surface.
D. Fastening to In-Place Construction: Provide anchorage devices and fasteners where metal fabrications are required to be fastened to in-place construction.
E. Provide temporary bracing or anchors in formwork for items that are to be built into concrete or similar construction.
3.2 INSTALLING METAL BOLLARDS
A. Anchor bollards in concrete or to concrete floors per drawings.
B. Fill bollards solidly with concrete, mounding top surface to shed water.
3.3 ADJUSTING AND CLEANING
A. Touchup Painting: Immediately after erection, clean field welds, bolted connections, and abraded areas. Paint uncoated and abraded areas with the same material as used for shop painting to comply with SSPC-PA 1 for touching up shop-painted surfaces.

END OF SECTION

SECTION 055133 - METAL LADDERS

PART 1 - GENERAL
1.1 SECTION INCLUDES
A. Shop-fabricated metal ladders.
B. Ladder safety systems.
1.2 SUBMITTALS
A. Product Data: Provide manufacturer's data sheets on each ladder safety system product to be used, including installation instructions.
B. Shop Drawings:
1. Indicate profiles, sizes, connection attachments, reinforcing, anchorage, size and type of fasteners, and accessories. Include erection drawings, elevations, and details where applicable.
C. Certificate: Provide documentation that ladder safety system products of this section meet or exceed cited 29 CFR 1910.28, 29 CFR 1910.29, ANSI/ASSP Z359.16, and ANSI A14.3 requirements.
1.3 QUALITY ASSURANCE
A. Design ladder and cage under direct supervision of a Professional Structural Engineer experienced in design of this work and licensed in Nebraska.

PART 2 - PRODUCTS
2.1 MATERIALS - STEEL
A. Steel Sections: ASTM A36/A36M.
B. Steel Tubing: ASTM A501/A501M hot-formed structural tubing.
C. Plates: ASTM A283/A283M.
D. Mechanical Fasteners: Same material or compatible with materials being fastened; type consistent with design and specified quality level.
E. Welding Materials: AWS D1.1/D1.1M; type required for materials being welded.
2.2 FABRICATION
A. Fit and shop assemble items in largest practical sections, for delivery to site.
B. Fabricate items with joints tightly fitted and secured.
C. Grind exposed joints flush and smooth with adjacent finish surface. Make exposed joints butt tight, flush, and hairline. Ease exposed edges to small uniform radius.
D. Exposed Mechanical Fastenings: Flush countersunk screws or bolts; unobtrusively located; consistent with design of component, except where specifically noted otherwise.
E. Supply components required for anchorage of fabrications. Fabricate anchors and related components of same material and finish as fabrication, except where specifically noted otherwise.
2.3 FABRICATED LADDERS
A. Ladders: Steel; in compliance with ANSI A14.3; with mounting brackets and attachments; shop-primed finish.
1. Side Rails: 3/8 by 2 inches members spaced at 20 inches.
2. Rungs: One inch diameter solid round bar spaced 12 inches on center.
3. Space rungs 7 inches from wall surface.
2.4 LADDER SAFETY SYSTEMS
A. Ladder Safety System: Comply with 29 CFR 1910.29, 29 CFR 1926.1053, and Section 7 of ANSI A14.3; ladder safety system allows the worker to climb up and down using both hands; does not require the user continuously, hold, push, or pull any part of the system while climbing.
1. Install on new fixed ladders over 24 feet in height.
2. Anchorage: Fixed ladder meeting requirements of 29 CFR 1910.23.
3. Flexible Carrier: Fixed 3/8 inch diameter stainless steel wire rope lifeline with shock absorber and top, bottom and intermediate supports.
a. Provide with steel extension post at top of ladder.
4. Rigid Carrier: Fixed 304 stainless steel U-shaped slotted track with top, bottom and intermediate supports.
a. Provide with steel extension post at top of ladder.
5. Fall Arrester: Stainless steel automatic pass-through carrier sleeve fall arrester; compatible with carrier.
B. Personal Fall Arrest System Components; 29 CFR 1910.140:
1. Body Support: Full body harness meeting requirements of ANSI/ASSP Z359.11; equipped with front or hip D-rings for attachment to climbing ladder fall arrest system.
2. Connecting Means: Connecting hardware, such as a locking carabiner, meeting requirements of ANSI/ASSP Z359.12; compatible with fall arrester and body support harness.
2.5 FINISHES - STEEL
A. Preparation for Shop Priming: Prepare surfaces to comply with SSPC-SP 6/NACE No. 3, "Commercial Blast Cleaning."
B. Shop Priming: Apply shop primer to comply with SSPC-PA 1, "Paint Application Specification No. 1: Shop, Field, and Maintenance Painting of Steel," for shop painting.
2.6 FABRICATION TOLERANCES
A. Squareness: 1/8 inch maximum difference in diagonal measurements.
B. Maximum Offset Between Faces: 1/16 inch.
C. Maximum Misalignment of Adjacent Members: 1/16 inch.
D. Maximum Bow: 1/8 inch in 48 inches.
E. Maximum Deviation From Plane: 1/16 inch in 48 inches.

PART 3 - EXECUTION
3.1 EXAMINATION
A. Verify that field conditions are acceptable and are ready to receive work.
B. Confirm that the ladder structure to which the ladder safety system is installed is capable of withstanding the loads applied by the system in the event of a fall.
3.2 INSTALLATION
A. Install items plumb and level, accurately fitted, free from distortion or defects.
B. Install ladder safety system in accordance with manufacturer's instructions.
C. Provide for erection loads, and for sufficient temporary bracing to maintain true alignment until completion of erection and installation of permanent attachments.
D. Field weld components as indicated on drawings.
E. Perform field welding in accordance with AWS D1.1/D1.1M.
F. Obtain approval prior to site cutting or making adjustments not scheduled.
G. After erection, prime welds, abrasions, and surfaces, except surfaces to be in contact with concrete.
3.3 TOLERANCES
A. Maximum Variation From Plumb: 1/4 inch per story, non-cumulative.
B. Maximum Offset From True Alignment: 1/4 inch.
C. Maximum Out-of-Position: 1/4 inch.

END OF SECTION

SECTION 061053 - MISCELLANEOUS ROUGH CARPENTRY

PART 1 - GENERAL
1.1 SUMMARY
A. Section Includes:
1. Wood blocking and nailers.
2. Wood furring.
1.2 ACTION SUBMITTALS
A. Product Data: For each type of process and factory-fabricated product.

PART 2 - PRODUCTS
2.1 WOOD PRODUCTS, GENERAL
A. Lumber: DOC PS 20 and applicable rules of grading agencies indicated. If no grading agency is indicated, provide lumber that complies with the applicable rules of any rules-writing agency certified by the ALSC Board of Review. Provide lumber graded by an agency certified by the ALSC Board of Review to inspect and grade lumber under the rules indicated.
1. Factory mark each piece of lumber with grade stamp of grading agency.
2. For exposed lumber indicated to receive a stained or natural finish, mark grade stamp on end or back of each piece.
B. Maximum Moisture Content of Lumber: 19 percent unless otherwise indicated.
2.2 FIRE-RETARDANT-TREATED MATERIALS
A. Fire-Retardant-Treated Lumber and Plywood by Pressure Process: Products with a flame-spread index of 25 or less when tested according to ASTM E 84, and with no evidence of significant progressive combustion when the test is extended an additional 20 minutes, and with the flame front not extending more than 10.5 feet beyond the centerline of the burners at any time during the test.
1. Interior Type A: Treated materials shall have a moisture content of 28 percent or less when tested according to ASTM D 3201 at 92 percent relative humidity. Use where exterior type is not indicated.
2. Design Value Adjustment Factors: Treated lumber shall be tested according to ASTM D 5664, and design value adjustment factors shall be calculated according to ASTM D 6841.
B. Identify fire-retardant-treated wood with appropriate classification marking of qualified testing agency.
C. Application: Treat all miscellaneous carpentry unless otherwise indicated.
2.3 MISCELLANEOUS LUMBER
A. General: Provide miscellaneous lumber indicated and lumber for support or attachment of other construction, including the following:
1. Blocking.
2. Nailers.
B. Dimension Lumber Items: Construction or No. 2 grade lumber of any species.
C. Concealed Boards: 19percent maximum moisture content of any of the following species and grades:
1. Mixed southern pine or southern pine, No. 2 grade; SPIB.
2. Eastern softwoods, No. 2 Common grade; NELMA.
3. Northern species, No. 2 Common grade; NLGA.
4. Western woods, Construction or No. 2 Common grade; WCLIB or WWPA.
2.4 FASTENERS
A. General: Provide fasteners of size and type indicated that comply with requirements specified in this article for material and manufacture.
1. Where carpentry is exposed to weather, in ground contact, pressure-preservative treated, or in area of high relative humidity, provide fasteners with hot-dip zinc coating complying with ASTM A 153/A 153M.
B. Screws for Fastening to Metal Framing: ASTM C 1002, length as recommended by screw manufacturer for material being fastened.
C. Power-Driven Fasteners: Fastener systems with an evaluation report acceptable to authorities having jurisdiction, based on ICC-ES AC70.

PART 3 - EXECUTION
3.1 INSTALLATION, GENERAL
A. Framing Standard: Comply with AF&PA's WCD 1, "Details for Conventional Wood Frame Construction," unless otherwise indicated.
B. Set carpentry to required levels and lines, with members plumb, true to line, cut, and fitted. Fit carpentry accurately to other construction. Locate nailers, blocking, and similar supports to comply with requirements for attaching other construction.
C. Do not splice structural members between supports unless otherwise indicated.
D. Comply with AWPA M4 for applying field treatment to cut surfaces of preservative-treated lumber.
E. Securely attach carpentry work to substrate by anchoring and fastening as indicated, complying with the following:
1. Table 2304.9.1, "Fastening Schedule," in ICC's International Building Code.
2. ICC-ES evaluation report for fastener.

END OF SECTION

SECTION 061600 – SHEATHING

PART 1 - GENERAL
1.1 SUMMARY
A. Section Includes:
1. Wall sheathing.
1.2 ACTION SUBMITTALS
A. Product Data: Indicate component materials and dimensions and include construction and application details.
1.3 DELIVERY, STORAGE, AND HANDLING
A. Stack panels flat with spacers beneath and between each bundle to provide air circulation. Protect sheathing from weather by covering with waterproof sheeting, securely anchored. Provide for air circulation around stacks and under coverings.

PART 2 - PRODUCTS
2.1 PERFORMANCE REQUIREMENTS
A. Fire-Resistance Ratings: As tested according to ASTM E 119; testing by a qualified testing agency. Identify products with appropriate markings of applicable testing agency.
1. Fire-Resistance Ratings: Indicated by design designations from UL's "Fire Resistance Directory" or from the listings of another qualified testing agency.
2.2 WALL AND SOFFIT SHEATHING
A. Glass-Mat Gypsum Sheathing: ASTM C 1177/1177M.
1. Manufacturers: Subject to compliance with requirements, provide products by one of the following:
a. Certainteed.
b. Georgia Pacific.
c. United States Gypsum Corporation.
2. Type and Thickness: Type X, 5/8 inch thick.
3. Size: 48 by 96 inches for vertical installation.
2.3 FASTENERS
A. General: Provide fasteners of size and type indicated that comply with general requirements specified in this article for material, and manufacturer requirements.
B. Screws for Fastening Wood Structural Panels to Cold-Formed Metal Framing: ASTM C 954, except with wafer heads and reamer wings, length as recommended by screw manufacturer for material being fastened.
C. Screws for Fastening Gypsum Sheathing to Cold-Formed Metal Framing: Steel drill screws, in length recommended by sheathing manufacturer for thickness of sheathing to be attached.
1. For steel framing less than 0.0329 inch thick, use screws that comply with ASTM C 1002.
2. For steel framing from 0.033 to 0.112 inch thick, use screws that comply with ASTM C 954.

PART 3 - EXECUTION
3.1 GYPSUM SHEATHING INSTALLATION
A. Comply with GA-253 and with manufacturer's written instructions.
1. Fasten gypsum sheathing to cold-formed metal framing with screws.
2. Install panels with a 3/8-inch gap where non-load-bearing construction abuts structural elements.
3. Install panels with a 1/4-inch gap where they abut masonry or similar materials that might retain moisture, to prevent wicking.
B. Apply fasteners so heads bear tightly against face of sheathing, but do not cut into facing.
C. Vertical Installation: Install vertical edges centered over studs. Abut ends and edges with those of adjacent panels. Attach at perimeter and within field of panel to each stud.
1. Space fasteners approximately 8 inches o.c. and set back a minimum of 3/8 inch from edges and ends of panels.
D. Seal sheathing joints according to sheathing manufacturer's written instructions.
1. Apply glass-fiber sheathing tape to glass-mat gypsum sheathing joints and apply and trowel sealant to embed entire face of tape in sealant. Apply sealant to exposed fasteners with a trowel so fasteners are completely covered. Seal other penetrations and openings.

END OF SECTION

SECTION 072100 - THERMAL INSULATION

PART 1 - GERNERAL
1.1 SUMMARY
A. Section Includes:
1. Extruded polystyrene foam-plastic board.
2. Glass-fiber blanket.
1.2 ACTION SUBMITTALS
A. Product Data: For each type of product.

PART 2 - PRODUCTS
2.1 EXTRUDED POLYSTYRENE FOAM-PLASTIC BOARD
A. Extruded polystyrene boards in this article are also called "XPS boards."
1. Fire Propagation Characteristics: Passes NFPA 285 testing as part of an approved assembly.
B. Extruded Polystyrene Board, Type IV (foundation insulation): ASTM C 578, Type IV, 25-psi minimum compressive strength; unfaced; maximum flame-spread and smoke-developed indexes of 25 and 450, respectively, per ASTM E 84.
1. Manufacturers: Subject to compliance with requirements, provide products by one of the following:
a. DiversiFoam Products.
b. Dow Chemical Company (The).
c. Owens Corning.
2.2 GLASS-FIBER BLANKET
A. Glass-Fiber Blanket, Unfaced: ASTM C 665, Type I; with maximum flame-spread and smoke-developed indexes of 25 and 50, respectively, per ASTM E 84; passing ASTM E 136 for combustion characteristics.
1. Manufacturers: Subject to compliance with requirements, provide products by one of the following:
a. CertainTeed Corporation.
b. Johns Manville; a Berkshire Hathaway company.
c. Knauf Insulation.
d. Owens Corning.
2.3 ACCESSORIES
A. Insulation for Miscellaneous Voids:
1. Glass-Fiber Insulation: ASTM C 764, Type II, loose fill; with maximum flame-spread and smoke-developed indexes of 5, per ASTM E 84.
B. Insulation Anchors, Spindles, and Standoffs: As recommended by manufacturer.
C. Adhesive for Bonding Insulation: Product compatible with insulation and air and water barrier materials, and with demonstrated capability to bond insulation securely to substrates without damaging insulation and substrates.

PART 3 - EXECUTION
3.1 INSTALLATION, GENERAL
A. Comply with insulation manufacturer's written instructions applicable to products and applications.
B. Extend insulation to envelop entire area to be insulated. Fit tightly around obstructions and fill voids with insulation. Remove projections that interfere with placement.
3.2 INSTALLATION OF FOUNDATION WALL INSULATION
A. Butt panels together for tight fit.
B. Anchor Installation: Install board insulation on concrete substrates by adhesively attached, spindle-type insulation anchors.
C. Adhesive Installation: Install with adhesive or press into tacky waterproofing or dampproofing according to manufacturer's written instructions.
3.3 INSTALLATION OF INSULATION IN FRAMED CONSTRUCTION
A. Blanket Insulation: Install in cavities formed by framing members according to the following requirements:
1. Use insulation widths and lengths that fill the cavities formed by framing members. If more than one length is required to fill the cavities, provide lengths that will produce a snug fit between ends.
2. Place insulation in cavities formed by framing members to produce a friction fit between edges of insulation and adjoining framing members.
3. Maintain 3-inch clearance of insulation around recessed lighting fixtures not rated for or protected from contact with insulation.
4. For metal-framed wall cavities where cavity heights exceed 96 inches, support unfaced blankets mechanically and support faced blankets by taping flanges of insulation to flanges of metal studs.
5. Vapor-Retarder-Faced Blankets: Tape joints and ruptures in vapor-retarder facings, and seal each continuous area of insulation to ensure airtight installation.
a. Exterior Walls: Set units with facing placed toward interior of construction.
B. Miscellaneous Voids: Install insulation in miscellaneous voids and cavity spaces where required to prevent gaps in insulation using the following materials:
1. Glass-Fiber Insulation: Compact to approximately 40 percent of normal maximum volume equaling a density of approximately 2.5 lb/cu. ft.

END OF SECTION

.

SECTION 072419 - WATER-DRAINAGE EXTERIOR INSULATION AND FINISH SYSTEM (EIFS)

PART 1 - GENERAL
1.1 SUMMARY
A. Section Includes:
1. EIFS-clad drainage-wall assemblies that are field applied over substrate.
2. Water-resistive barrier coatings.
1.2 ACTION SUBMITTALS
A. Product Data: For each EIFS component, trim, and accessory, including water-resistive barrier coatings.
B. Shop Drawings:
1. Include details for EIFS buildouts.
2. Include details for parapet cap flashing.
C. Samples: For each exposed product and for each color and texture specified.
1.3 INFORMATIONAL SUBMITTALS
A. Product certificates.
B. Product test reports.
C. Field quality-control reports.
1.4 CLOSEOUT SUBMITTALS
A. Maintenance data.
1.5 QUALITY ASSURANCE
A. Installer Qualifications: An installer who is certified in writing by EIFS system manufacturer as qualified to install manufacturer's system using trained workers.
1. Installer foreman engaged in installation of EIFS for this project shall have been trained and certified by EIFS manufacturer within past 12 months.
B. Manufacturer Qualifications:
1. Engage a firm experienced in manufacturing systems similar to those indicated for this project and with a record of successful in-service performance.
2. Member in good standing of the EIFS Industry Members Association (EIMA).
3. System manufacturer for a minimum of fifteen (15) years.
4. System recognized for intended use by the national codes and by the local code agency with jurisdiction over the project.
5. System listed by nationally recognized test agency.
6. System listed in GA (Gypsum Association) Fire-Resistance Design Manual.

PART 2 - PRODUCTS
2.1 MANUFACTURERS
A. Manufacturers: Subject to compliance with requirements, available manufacturers offering products that may be incorporated into the Work include, but are not limited to the following:
1. Dryvit Systems, Inc.
2. Parex USA, Inc.
3. Senergy Div. of Harris Specialty Chemicals, Inc.
4. Sto Corp.
2.2 PERFORMANCE REQUIREMENTS
A. EIFS Performance: Comply with ASTM E 2568 and with the following:
1. Weathertightness: Resistant to uncontrolled water penetration from exterior, with a means to drain water entering EIFS to the exterior.
2. Impact Performance: ASTM E 2568, Standard impact resistance.
3. Drainage Efficiency: 90 percent average minimum when tested according to ASTM E 2273.
2.3 EIFS MATERIALS
A. Water-Resistive Barrier Coating: EIFS manufacturer's standard formulation and accessories for use as water-resistive barrier coating; compatible with substrate.
1. Water-Resistance: Comply with physical and performance criteria of ASTM E 2570/E 2570M.
B. Insulation Adhesive: EIFS manufacturer's standard formulation designed for indicated use; specifically formulated to be applied to back side of insulation in a manner that creates open vertical channels designed to serve as an integral part of the water-drainage system of the EIFS-clad drainage-wall assembly; compatible with substrate.
C. Molded, (Expanded) Rigid Cellular Polystyrene Board Insulation: Comply with ASTM E 2430/E 2430M.
1. Foam Buildouts: Provide with profiles and dimensions indicated on Drawings.
D. Reinforcing Mesh: Balanced, alkali-resistant, open-weave, glass-fiber mesh treated for compatibility with other EIFS materials, made from continuous multiend strands with retained mesh tensile strength of not less than 120 lbf/in. according to ASTM E 2098/E 2098M.
E. Base Coat: EIFS manufacturer's standard mixture.
F. Water-Resistant Base Coat: EIFS manufacturer's standard water-resistant formulation.
G. Primer: EIFS manufacturer's standard factory-mixed, elastomeric-polymer primer for preparing base-coat surface for application of finish coat.
H. Finish Coat: EIFS manufacturer's standard acrylic-based coating with enhanced mildew resistance.
1. Colors: As indicated in drawings.
2. Textures: Medium sand texture.
I. Trim Accessories: Type as designated or required to suit conditions indicated and to comply with EIFS manufacturer's written instructions; manufactured from UV-stabilized PVC; and complying with ASTM D 1784, manufacturer's standard cell class for use intended, and ASTM C 1063.

SECTION 072419 - WATER-DRAINAGE EXTERIOR INSULATION AND FINISH SYSTEM (EIFS) - CONT'D

PART 3 - EXECUTION
3.1 EIFS INSTALLATION
A. Comply with ASTM C 1397, ASTM E 2511, and EIFS manufacturer's written instructions for installation of EIFS as applicable to each type of substrate indicated.
B. Water-Resistive Barrier Coating: Apply over sheathing to provide a water-resistive barrier.
C. Flexible-Membrane Flashing: Install over water-resistive barrier coating, applied and lapped to shed water; seal at openings, penetrations, and terminations. Prime substrates with flashing primer if required and install flashing.
D. Trim: Apply trim accessories at perimeter of EIFS and as indicated. Coordinate with installation of insulation.
E. Board Insulation: Adhesively attach insulation to substrate in compliance with ASTM C 1397.
1. Apply adhesive to insulation by notched-trowel method, with notches oriented vertically to produce drainage channels that remain functional after the insulation is adhered to substrate.
2. Coordinate installation of flashing and insulation to produce wall assembly that does not allow water to penetrate behind flashing and water-resistive barrier coating.
F. Water-Resistant Base Coat: Apply full-thickness coverage to exposed insulation and to exposed surfaces of parapets, foam build-outs and to other surfaces indicated on Drawings.
G. Base Coat: Apply full coverage to exposed insulation and foam build-outs with not less than 1/16-inch dry-coat thickness.
H. Reinforcing Mesh: Embed reinforcing mesh in wet base coat to produce wrinkle-free installation with mesh continuous at corners, overlapped not less than 2-1/2 inches or otherwise treated at joints to comply with ASTM C 1397. Do not lap reinforcing mesh within 8 inches of corners. Completely embed mesh, applying additional base-coat material if necessary, so reinforcing-mesh color and pattern are invisible.
I. Double-Layer Reinforcing-Mesh Application: Where indicated or required, apply second base coat and second layer of reinforcing mesh, overlapped not less than 2-1/2 inches or otherwise treated at joints to comply with ASTM C 1397 in same manner as first application. Do not apply until first base coat has cured.
J. Additional Reinforcing Mesh: Apply strip-reinforcing mesh around openings, extending 4 inches beyond perimeter. Apply additional 9-by-12-inch strip-reinforcing mesh diagonally at corners of openings (re-entrant corners). Apply 8-inch- wide, strip-reinforcing mesh at both inside and outside corners unless base layer of mesh is lapped not less than 4 inches on each side of corners.
K. Foam Buildouts: Fully embed reinforcing mesh in base coat.
L. Double Base-Coat Application: Where indicated, apply second base coat in same manner and thickness as first application, except without reinforcing mesh. Do not apply until first base coat has cured.
M. Finish Coat: Apply full-thickness coverage over dry base coat, maintaining a wet edge at all times for uniform appearance, to produce a uniform finish of color and texture matching approved sample and free of cold joints, shadow lines, and texture variations.
N. Sealer Coat: Apply over dry finish coat, in number of coats and thickness required by EIFS manufacturer.

END OF SECTION

SECTION 072600 - VAPOR RETARDERS

PART 1 - GENERAL
1.1 SUMMARY
A. Section Includes:
1. Polyethylene vapor retarders for wall locations.
1.2 ACTION SUBMITTALS
A. Product Data: For each type of product.

PART 2 - PRODUCTS
2.1 POLYETHYLENE VAPOR RETARDERS
A. Polyethylene Vapor Retarders: ASTM D 4397, 6-mil thick sheet, with maximum permeance rating of 0.1 perm.
2.2 ACCESSORIES
A. Vapor-Retarder Tape: Pressure-sensitive tape of type recommended by vapor-retarder manufacturer for sealing joints and penetrations in vapor retarder.
B. Adhesive for Vapor Retarders: Product recommended by vapor-retarder manufacturer and has demonstrated capability to bond vapor retarders securely to substrates indicated.
C. Vapor-Retarder Fasteners: Pancake-head, self-tapping steel drill screws; with fender washers.

PART 3 - EXECUTION
3.1 PREPARATION
A. Clean substrates of substances that are harmful to vapor retarders, including removing projections capable of puncturing vapor retarders.
3.2 INSTALLATION OF VAPOR RETARDERS ON WALL INSULATION/FRAMING
A. Place vapor retarders on warm (interior) side of wall construction.
B. Extend vapor retarders to extremities of areas to protect from vapor transmission. Secure vapor retarders in place with adhesives, vapor retarder fasteners, or other anchorage system as recommended by manufacturer. Extend vapor retarders to cover miscellaneous voids in insulated substrates, including those filled with loose-fiber insulation.
C. Seal vertical joints in vapor retarders over framing by lapping no fewer than two studs and sealing with vapor-retarder tape according to vapor-retarder manufacturer's written instructions. Locate all joints over framing members or other solid substrates.
D. Seal joints caused by pipes, conduits, electrical boxes, and similar items penetrating vapor retarders with vapor-retarder tape to create an airtight seal between penetrating objects and vapor retarders.
E. Repair tears or punctures in vapor retarders immediately before concealment by other work. Cover with vapor-retarder tape or another layer of vapor retarders.
3.3 PROTECTION
A. Protect vapor retarders from damage until concealed by permanent construction.

END OF SECTION

SECTION 072726 - FLUID-APPLIED MEMBRANE AIR BARRIERS

PART 1 - GENERAL
1.1 SUMMARY
A. Section Includes:
1. Vapor-permeable, fluid-applied air barriers.
1.2 ACTION SUBMITTALS
A. Product Data: For each type of product.
1.3 QUALITY ASSURANCE
A. Installer Qualifications: An entity that employs installers and supervisors who are trained and approved by manufacturer.

PART 2 - PRODUCTS
2.1 PERFORMANCE REQUIREMENTS
A. Air-Barrier Performance: Air-barrier assembly and seals with adjacent construction shall be capable of performing as a continuous air barrier and as a liquid-water drainage plane flashed to discharge to the exterior incidental condensation or water penetration. Air-barrier assemblies shall be capable of accommodating substrate movement and of sealing substrate expansion and control joints, construction material changes, penetrations, and transitions at perimeter conditions without deterioration and air leakage exceeding specified limits.
2.2 MEDIUM-BUILD AIR BARRIERS, VAPOR PERMEABLE
A. Medium-Build, Vapor-Permeable Air Barrier: Synthetic polymer material with an installed dry film thickness, according to manufacturer's written instructions, of 17 to 30 mils over smooth, void-free substrates.
1. Manufacturers: Subject to compliance with requirements, provide products by one of the following:
a. 3M Industrial Adhesives and Tapes Division.
b. DuPont Protection Solutions: E. I. du Pont de Nemours and Company.
c. Sto Corp.
d. W. R. Meadows, Inc.
2. Physical and Performance Properties:
a. Air Permeance: Maximum 0.004 cfm/sq. ft. of surface area at 1.57-lbf/sq. ft. pressure difference; ASTM E 2178 and ASTM E 2357.
b. Vapor Permeance: Minimum 10 perms; ASTM E 96/E 96M, Desiccant Method, Procedure A.
c. Ultimate Elongation: Minimum 250 percent; ASTM D 412, Die C.
d. Adhesion to Substrate: Minimum 16 lbf/sq. in. when tested according to ASTM D 4541.
e. Fire Propagation Characteristics: Passes NFPA 285 testing as part of an approved assembly if applicable.
f. UV Resistance: Can be exposed to sunlight for 180 days according to manufacturer's written instructions.
2.3 ACCESSORY MATERIALS
A. Requirement: Provide primers, transition strips, termination strips, joint reinforcing fabric and strips, joint sealants, counterflashing strips, flashing sheets and metal termination bars, termination mastic, substrate patching materials, adhesives, tapes, foam sealants, lap sealants, and other accessory materials that are recommended in writing by air-barrier manufacturer to produce a complete air-barrier assembly and that are compatible with primary air-barrier material and adjacent construction to which they may seal.

PART 3 - EXECUTION
3.1 SURFACE PREPARATION
A. Clean, prepare, treat, fill, and seal substrate and joints and cracks in substrate according to manufacturer's written instructions and details. Provide clean, dust-free, and dry substrate for air-barrier application.
B. Mask off adjoining surfaces not covered by air barrier to prevent spillage and overspray affecting other construction.
C. Remove fins, ridges, mortar, and other projections and fill honeycomb, aggregate pockets, holes, and other voids in concrete with substrate-patching material.
D. Remove excess mortar from masonry ties, shelf angles, and other obstructions.
E. At changes in substrate plane, apply sealant or termination mastic beads at sharp corners and edges to form a smooth transition from one plane to another.
F. Bridge isolation joints, expansion joints, and discontinuous wall-to-wall, deck-to-wall, and deck-to-deck joints with air-barrier accessory material that accommodates joint movement according to manufacturer's written instructions and details.
3.2 INSTALLATION
A. Install materials according to air-barrier manufacturer's written instructions and details to form a seal with adjacent construction and ensure continuity of air and water barrier.
1. Coordinate the installation of air barrier with installation of roofing membrane and base flashing to ensure continuity of air barrier with roofing membrane.
2. Install transition strip on roofing membrane or base flashing so that a minimum of 3 inches of coverage is achieved over each substrate.
3. Unless manufacturer recommends in writing against priming, apply primer to substrates at required rate and allow it to dry.
4. Apply primer to substrates at required rate and allow it to dry. Limit priming to areas that will be covered by air-barrier material on same day. Reprime areas exposed for more than 24 hours.
B. Connect and seal exterior wall air-barrier material continuously to roofing-membrane air barrier, concrete below-grade structures, floor-to-floor construction, exterior glazing and window systems, glazed curtain-wall systems, storefront systems, exterior louvers, exterior door framing, and other construction used in exterior wall openings, using accessory materials.
C. Wall Openings: Prime concealed, perimeter frame surfaces of windows, curtain walls, storefronts, and doors. Apply transition strip so that a minimum of 3 inches of coverage is achieved over each substrate. Maintain 3 inches of full contact over firm bearing to perimeter frames, with not less than 1 inch of full contact.
D. Repair punctures, voids, and deficient lapped seams in strips and transition strips. Slit and flatten fishmouths and blisters. Patch with transition strips extending 6 inches beyond repaired areas in strip direction.
E. Medium-Build Air Barriers: Apply continuous unbroken air-barrier material to substrates according to the following thickness. Apply an increased thickness of air-barrier material in full contact around protrusions such as masonry ties.
1. Vapor-Permeable, Medium-Build Air Barrier: Total dry film thickness as recommended in writing by manufacturer to comply with performance requirements, applied in one or more equal coats. Apply additional material as needed to achieve void- and pinhole-free surface, but do not exceed thickness on which required vapor permeability is based.
F. Do not cover air barrier until it has been tested and inspected by testing agency.
G. Correct deficiencies in or remove air barrier that does not comply with requirements; repair substrates and reapply air-barrier components.
3.3 CLEANING AND PROTECTION
A. Protect air-barrier system from damage during application and remainder of construction period, according to manufacturer's written instructions.
B. Remove masking materials after installation.

END OF SECTION

SECTION 075423 - THERMOPLASTIC-POLYOLEFIN (TPO) ROOFING

PART 1 - GENERAL
1.1 SUMMARY
A. Section Includes:
1. Adhered thermoplastic polyolefin (TPO) roofing system.
2. Roof insulation.
3. Walkways.
1.2 PREINSTALLATION MEETINGS
A. Preinstallation Conference: Conduct conference at Project site.
1.3 ACTION SUBMITTALS
A. Product Data: For each type of product.
B. Shop Drawings: Include roof plans, sections, details, and attachments to other work, including the following:
1. Layout and thickness of insulation.
2. Base flashings and membrane termination details.
3. Flashing details at penetrations.
4. Tapered insulation layout, thickness, and slopes.
5. Roof plan showing orientation of steel roof deck and orientation of roof membrane, fastening spacings, and patterns for mechanically fastened roofing system.
6. Insulation fastening patterns for corner, perimeter, and field-of-roof locations.
7. Tie-in with adjoining air barrier.
C. Wind Uplift Resistance Submittal: For roofing system, indicating compliance with wind uplift performance requirements.
1.4 INFORMATIONAL SUBMITTALS
A. Manufacturer Certificates:
1. Performance Requirement Certificate: Signed by roof membrane manufacturer, certifying that roofing system complies with requirements specified in "Performance Requirements" Article.
a. Submit evidence of compliance with performance requirements.
2. Special Warranty Certificate: Signed by roof membrane manufacturer, certifying that all materials supplied under this Section are acceptable for special warranty.

SECTION 075423 - THERMOPLASTIC-POLYOLEFIN (TPO) ROOFING - CONT'D

B. Product Test Reports: For roof membrane and insulation, for tests performed by a qualified testing agency, indicating compliance with specified requirements.
C. Research reports.
D. Field Test Reports:
1. Concrete internal relative humidity test reports.
2. Fastener-pullout test results and manufacturer's revised requirements for fastener patterns.
E. Field quality-control reports.
F. Sample warranties.
1.5 CLOSEOUT SUBMITTALS
A. Maintenance data.
B. Certified statement from existing roof membrane manufacturer stating that existing roof warranty has not been affected by Work performed under this Section.
1.6 QUALITY ASSURANCE
A. Installer Qualifications: A qualified firm that is approved, authorized, or licensed by roofing system manufacturer to install manufacturer's product and that is eligible to receive manufacturer's special warranty.
1.7 WARRANTY
A. Special Warranty: Manufacturer agrees to repair or replace components of roofing system that fail in materials or workmanship within specified warranty period.
1. Warranty Period: 20 years from date of Substantial Completion.

PART 2 - PRODUCTS
2.1 PERFORMANCE REQUIREMENTS
A. Accelerated Weathering: Roof membrane shall withstand 2000 hours of exposure when tested according to ASTM G152, ASTM G154, or ASTM G155.
B. Impact Resistance: Roof membrane shall resist impact damage when tested according to ASTM D3746, ASTM D4272, or the "Resistance to Foot Traffic Test" in FM Approvals 4470.
C. Wind Uplift Resistance: Design roofing system to resist the following wind uplift pressures when tested according to FM Approvals 4474, UL 580, or UL 1897:
a. See Structural Drawings for Roof Zone Loading.
D. SPRI's Directory of Roof Assemblies Listing: Roof membrane, base flashings, and component materials shall comply with requirements in FM Approvals 4450 or FM Approvals 4470 as part of a roofing system, and shall be listed in SPRI's Directory of Roof Assemblies for roof assembly identical for that specified for this Project.
1. Wind Uplift Load Capacity: 90 psf.
E. ENERGY STAR Listing: Roofing system shall be listed on the DOE's ENERGY STAR "Roof Products Qualified Product List" for low-slope roof products.
F. Energy Performance: Roofing system shall have an initial solar reflectance of not less than 0.70 and an emissivity of not less than 0.75 when tested according to CRRC-1.
2.2 THERMOPLASTIC POLYOLEFIN (TPO) ROOFING
A. TPO Sheet: ASTM D6878/D6878M, internally fabric- or scrim-reinforced,TPO sheet.
1. Manufacturers: Subject to compliance with requirements, provide products by one of the following:
a. Carlisle SynTec Incorporated.
b. Firestone Building Products.
c. GenFlex Roofing Systems.
d. Johns Manville; a Berkshire Hathaway company.
e. Mule-Hide Products Co., Inc.
f. Versico Roofing Systems.
2. Thickness: 60 mils, nominal.
3. Exposed Face Color: White.
2.3 AUXILIARY ROOFING MATERIALS
A. General: Auxiliary materials recommended by roofing system manufacturer for intended use and compatible with other roofing components.
1. Adhesive and Sealants: Comply with VOC limits of authorities having jurisdiction.
B. Sheet Flashing: Manufacturer's standard unreinforced TPO sheet flashing, 55 mils thick, minimum, of same color as TPO sheet.
C. Prefabricated Pipe Flashings: As recommended by roof membrane manufacturer.
D. Bonding Adhesive: Manufacturer's standard.
E. Slip Sheet: Manufacturer's standard, of thickness required for application.
F. Metal Termination Bars: Manufacturer's standard, predrilled stainless steel or aluminum bars, approximately 1 by 1/8 inch thick; with anchors.
G. Fasteners: Factory-coated steel fasteners and metal or plastic plates complying with corrosion-resistance provisions in FM Approvals 4470, designed for fastening roofing components to substrate, and acceptable to roofing system manufacturer.
H. Miscellaneous Accessories: Provide pourable sealers, preformed cone and vent sheet flashings, preformed inside and outside corner sheet flashings, T-joint covers, lap sealants, termination reglets, and other accessories.
2.4 ROOF INSULATION
A. Polyisocyanurate Board Insulation: ASTM C1289, Type II, Class 1, Grade 2, felt or glass-fiber mat facer on both major surfaces.
1. Manufacturers: Subject to compliance with requirements, provide products by one of the following:
a. Atlas Roofing Corporation - Polyiso.
b. Carlisle SynTec Incorporated.
c. Firestone Building Products.
d. GAF.
e. Hunter Panels.
f. Johns Manville; a Berkshire Hathaway company.
2. Size: 48 by 96 inches.
3. Thickness:
a. Base Layer: See Drawings.
b. Upper Layer: See Drawings.
B. Tapered Insulation: Provide factory-tapered insulation boards.
1. Material: Match roof insulation.
2. Minimum Thickness: 1/4 inch.
3. Slope:
a. Roof Field: 1/4 inch per foot unless otherwise indicated on Drawings.
b. Saddles and Crickets: 1/2 inch per foot unless otherwise indicated on Drawings.
2.5 INSULATION ACCESSORIES
A. Fasteners: Factory-coated steel fasteners with metal or plastic plates complying with corrosion-resistance provisions in FM Approvals 4470, designed for fastening roof insulation to substrate, and acceptable to roofing system manufacturer.
B. Flexible Walkways: Factory-formed, nonporous, heavy-duty, slip-resisting, surface-textured walkway pads or rolls, approximately 3/16 inch thick and acceptable to roofing system manufacturer.
1. Size: Approximately 36 by 60 inches.
2. Color: Contrasting with roof membrane.

PART 3 - EXECUTION
3.1 EXAMINATION
A. Examine substrates, areas, and conditions, with Installer present, for compliance with requirements and other conditions affecting performance of the Work.
3.2 PREPARATION
A. Perform fastener-pullout tests according to roof system manufacturer's written instructions.
1. Submit test result within 24 hours after performing tests.
a. Include manufacturer's requirements for any revision to previously submitted fastener patterns required to achieve specified wind uplift requirements.
3.3 INSTALLATION OF ROOFING, GENERAL
A. Install roofing system according to roofing system manufacturer's written instructions, SPRI's Directory of Roof Assemblies listed roof assembly requirements, and FM Global Property Loss Prevention Data Sheet 1-29.
B. Complete terminations and base flashings and provide temporary seals to prevent water from entering completed sections of roofing system at end of workday or when rain is forecast. Remove and discard temporary seals before beginning Work on adjoining roofing.
C. Install roof membrane and auxiliary materials to tie in to existing roofing to maintain weathertightness of transition.
3.4 INSTALLATION OF INSULATION
A. Coordinate installing roofing system components so insulation is not exposed to precipitation or left exposed at end of workday.
B. Comply with roofing system and roof insulation manufacturer's written instructions for installing roof insulation.
C. Installation Over Metal Decking:
1. Install base layer of insulation with joints staggered not less than 24 inches in adjacent rows and with long joints continuous at right angle to flutes of decking.
a. Locate end joints over crests of decking.
b. Trim insulation neatly to fit around penetrations and projections, and to fit tight to intersecting sloping roof decks.
c. Make joints between adjacent insulation boards not more than 1/4 inch in width.
d. At internal roof drains, slope insulation to create a square drain sump with each side equal to the diameter of the drain bowl plus 24 inches.
1) Trim insulation so that water flow is unrestricted.
e. Fill gaps exceeding 1/4 inch with insulation.
f. Cut and fit insulation within 1/4 inch of nailers, projections, and penetrations.
g. Mechanically attach base layer of insulation using mechanical fasteners specifically designed and sized for fastening specified board-type roof insulation to metal decks.
1) Fasten insulation according to requirements in SPRI's Directory of Roof Assemblies for specified Wind Uplift Load Capacity.
2) Fasten insulation to resist specified uplift pressure at corners, perimeter, and field of roof.

2. Install upper layers of insulation and tapered insulation with joints of each layer offset not less than 12 inches from previous layer of insulation.
a. Install with long joints continuous and with end joints staggered not less than 12 inches in adjacent rows.
b. Trim insulation neatly to fit around penetrations and projections, and to fit tight to intersecting sloping roof decks.
c. Make joints between adjacent insulation boards not more than 1/4 inch in width.
d. At internal roof drains, slope insulation to create a square drain sump with each side equal to the diameter of the drain bowl plus 24 inches.
1) Trim insulation so that water flow is unrestricted.
e. Fill gaps exceeding 1/4 inch with insulation.
f. Cut and fit insulation within 1/4 inch of nailers, projections, and penetrations.
3.5 INSTALLATION OF ADHERED ROOF MEMBRANE
A. Adhere roof membrane over area to receive roofing according to roofing system manufacturer's written instructions.
B. Unroll roof membrane and allow to relax before installing.
C. Start installation of roofing in presence of roofing system manufacturer's technical personnel.
D. Accurately align roof membrane, and maintain uniform side and end laps of minimum dimensions required by manufacturer. Stagger end laps.
E. In addition to adhering, mechanically fasten roof membrane securely at terminations, penetrations, and perimeter of roofing.
F. Apply roof membrane with side laps shingled with slope of roof deck where possible.
G. Seams: Clean seam areas, overlap roof membrane, and hot-air weld side and end laps of roof membrane and sheet flashings, to ensure a watertight seam installation.
1. Test lap edges with probe to verify seam weld continuity. Apply lap sealant to seal cut edges of roof membrane and sheet flashings.
2. Verify field strength of seams a minimum of twice daily, and repair seam sample areas.
3. Repair tears, voids, and lapped seams in roof membrane that do not comply with requirements.
H. Spread sealant bed over deck-drain flange at roof drains, and securely seal roof membrane in place with clamping ring.
3.6 INSTALLATION OF BASE FLASHING
A. Install sheet flashings and preformed flashing accessories, and adhere to substrates according to roofing system manufacturer's written instructions.
B. Apply bonding adhesive to substrate and underside of sheet flashing at required rate, and allow to partially dry. Do not apply to seam area of flashing.
C. Flash penetrations and field-formed inside and outside corners with cured or uncured sheet flashing.
D. Clean seam areas, overlap, and firmly roll sheet flashings into the adhesive. Hot-air weld side and end laps to ensure a watertight seam installation.
E. Terminate and seal top of sheet flashings and mechanically anchor to substrate through termination bars.
3.7 INSTALLATION OF WALKWAYS
A. Flexible Walkways:
1. Install flexible walkways at the following locations:
a. Locations indicated on Drawings.
b. As required by roof membrane manufacturer's warranty requirements.
2. Provide 6-inch clearance between adjoining pads.
3. Heat weld to substrate or adhere walkway products to substrate with compatible adhesive according to roofing system manufacturer's written instructions.
3.8 PROTECTING AND CLEANING
A. Protect roofing system from damage and wear during remainder of construction period. When remaining construction does not affect or endanger roofing system, inspect roofing system for deterioration and damage, describing its nature and extent in a written report, with copies to Architect and Owner.
B. Correct deficiencies in or remove roofing system that does not comply with requirements, repair substrates, and repair or reinstall roofing system to a condition free of damage and deterioration at time of Substantial Completion and according to warranty requirements.
C. Clean overspray and spillage from adjacent construction using cleaning agents and procedures recommended by manufacturer of affected construction.

END OF SECTION

DESIGNED: NJB
DRAWN: NJB
CHECKED: DJK

ISSUE DATE: 10/18/2024
REVISIONS:

No.:	DATE:	BY:	DESCRIPTION:

ARCHITECT
DANIEL J. KERNS
A-4463
10/17/24
STATE OF NEBRASKA

SCHEMMER
Design with Purpose. Build with Confidence.
1044 North 115th Street, Suite 300, Omaha, Nebraska 68154 | 402.493.4800
CA0666

LANOHA DEVELOPMENT
HAWTHORNE COURT MULTI-TENANT BUILDING
17662 WELCH PLAZA
OMAHA, NE 68154
ARCHITECTURAL SPECS

PROJECT NO.: 010347.001

A 01

SECTION 076200 - SHEET METAL FLASHING AND TRIM

PART 1 - GENERAL
1.1 SUMMARY
A. Section Includes:
1. Manufactured reglets with counterflashing.
2. Formed low-slope roof sheet metal fabrications.
1.2 PREINSTALLATION MEETINGS
A. Preinstallation Conference: Conduct conference at Project site.
1.3 ACTION SUBMITTALS
A. Product Data: For each of the following
1. Underlayment materials.
2. Elastomeric sealant.
3. Butyl sealant.
4. Epoxy seam sealer.
B. Shop Drawings: For sheet metal flashing and trim.
1. Include plans, elevations, sections, and attachment details.
2. Detail fabrication and installation layouts, expansion-joint locations, and keyed details. Distinguish between shop- and field-assembled Work.
3. Include identification of material, thickness, weight, and finish for each item and location in Project.
4. Include details for forming, including profiles, shapes, seams, and dimensions.
5. Include details for joining, supporting, and securing, including layout and spacing of fasteners, cleats, clips, and other attachments. Include pattern of seams.
6. Include details of termination points and assemblies.
7. Include details of expansion joints and expansion-joint covers, including showing direction of expansion and contraction from fixed points.
8. Include details of roof-penetration flashing.
9. Include details of edge conditions, including eaves, ridges, valleys, rakes, crickets, flashings, and counterflashings.
10. Include details of special conditions.
11. Include details of connections to adjoining work.
C. Samples: For each exposed product and for each color and texture specified, 12 inches long by actual width.
1.4 INFORMATIONAL SUBMITTALS
A. Sample warranty.
1.5 CLOSEOUT SUBMITTALS
A. Maintenance data.
B. Special warranty.
1.6 QUALITY ASSURANCE
A. Fabricator Qualifications: Employs skilled workers who custom fabricate sheet metal flashing and trim similar to that required for this Project and whose products have a record of successful in-service performance.
1.7 WARRANTY
A. Special Warranty on Finishes: Manufacturer agrees to repair finish or replace sheet metal flashing and trim that shows evidence of deterioration of factory-applied finishes within specified warranty period.
1. Exposed Panel Finish: Deterioration includes, but is not limited to, the following:
a. Color fading more than 5 Delta E units when tested in accordance with ASTM D2244.
b. Chalking in excess of a No. 8 rating when tested in accordance with ASTM D4214.
c. Cracking, checking, peeling, or failure of paint to adhere to bare metal.
2. Finish Warranty Period: 20 years from date of Substantial Completion.

PART 2 - PRODUCTS
2.1 PERFORMANCE REQUIREMENTS
A. Sheet metal flashing and trim assemblies, including cleats, anchors, and fasteners, shall withstand wind loads, structural movement, thermally induced movement, and exposure to weather without failure due to defective manufacture, fabrication, installation, or other defects in construction. Completed sheet metal flashing and trim shall not rattle, leak, or loosen, and shall remain watertight.
B. Sheet Metal Standard for Flashing and Trim: Comply with NRCA's "The NRCA Roofing Manual: Architectural Metal Flashing, Condensation and Air Leakage Control, and Reroofing" and SMACNA's "Architectural Sheet Metal Manual" requirements for dimensions and profiles shown unless more stringent requirements are indicated.
C. SPRI Wind Design Standard: Manufacture and install copings and roof edge flashings tested in accordance with ANSI/SPRI/FM 4435/ES-1 and capable of resisting the following design pressure:
1. Design Pressure: As indicated on Drawings.
D. Thermal Movements: Allow for thermal movements from ambient and surface temperature changes to prevent buckling, opening of joints, overstressing of components, failure of joint sealants, failure of connections, and other detrimental effects. Base calculations on surface temperatures of materials due to both solar heat gain and nighttime-sky heat loss.
1. Temperature Change: 120 deg F, ambient; 180 deg F, material surfaces.
2.2 SHEET METALS
A. Protect mechanical and other finishes on exposed surfaces from damage by applying strippable, temporary protective film before shipping.
B. Metallic-Coated Steel Sheet: Provide zinc-coated (galvanized) steel sheet in accordance with ASTM A653/A653M, G90 coating designation or aluminum-zinc alloy-coated steel sheet in accordance with ASTM A792/A792M, Class AZ50 coating designation, Grade 40; prepainted by coil-coating process to comply with ASTM A755/A755M.
1. Surface: Smooth, flat and with manufacturer's standard clear acrylic coating on both sides.
2. Exposed Coil-Coated Finish:
a. High Performance Liquid Fluoropolymer Coil Coatings, AAMA 621: Minimum 50 percent Kynar® PVDF resin, by weight, in color coat.
b. Product : Kynar 500
c. Pencil Hardness, ASTM D3363: HB minimum.
d. Dry Film Thickness, ASTM D1400: 0.20 mil primer coat plus 0.70 mil color coat, 0.90 mil total, minimum thickness.
3. Color: As selected by Architect from manufacturer's full range.
4. Concealed Finish: Pretreat with manufacturer's standard white or light-colored acrylic or polyester backer finish, consisting of prime coat and wash coat with minimum total dry film thickness of 0.5 mil.
2.3 UNDERLAYMENT MATERIALS
A. Felt: ASTM D226/D226M, Type II (No. 30), asphalt-saturated organic felt; nonperforated.
B. Slip Sheet: Rosin-sized building paper, 3 lb/100 sq. ft. minimum.
2.4 MISCELLANEOUS MATERIALS
A. Provide materials and types of fasteners, solder, protective coatings, sealants, and other miscellaneous items as required for complete sheet metal flashing and trim installation and as recommended by manufacturer of primary sheet metal or manufactured item unless otherwise indicated.
B. Fasteners: Wood screws, annular threaded nails, self-tapping screws, self-locking rivets and bolts, and other suitable fasteners designed to withstand design loads and recommended by manufacturer of primary sheet metal or manufactured item.
1. General: Blind fasteners or self-drilling screws, gasketed, with hex-washer head.
a. Exposed Fasteners: Heads matching color of sheet metal using plastic caps or factory-applied coating. Provide metal-backed EPDM or PVC sealing washers under heads of exposed fasteners bearing on weather side of metal.
b. Blind Fasteners: High-strength aluminum or stainless steel rivets suitable for metal being fastened.
c. Spikes and Ferrules: Same material as gutter; with spike with ferrule matching internal gutter width.
2. Fasteners for Zinc-Coated (Galvanized) Steel Sheet: Series 300 stainless steel or hot-dip galvanized steel in accordance with ASTM A153/A153M or ASTM F2329.
C. Solder:
1. For Zinc-Coated (Galvanized) Steel: ASTM B32, Grade Sn50, 50 percent tin and 50 percent lead or Grade Sn60, 60 percent tin and 40 percent lead with maximum lead content of 0.2 percent.
D. Sealant Tape: Pressure-sensitive, 100 percent solids, polyisobutylene compound sealant tape with release-paper backing. Provide permanently elastic, nonsag, nontoxic, nonstaining tape 1/2 inch wide and 1/8 inch thick.
E. Elastomeric Sealant: ASTM C920, elastomeric polyurethane polymer sealant; of type, grade, class, and use classifications required to seal joints in sheet metal flashing and trim and remain watertight.
F. Butyl Sealant: ASTM C1311, single-component, solvent-release butyl rubber sealant; polyisobutylene plasticized; heavy bodied for hooked-type expansion joints with limited movement.
G. Bituminous Coating: Cold-applied asphalt emulsion in accordance with ASTM D1187/D1187M.
H. Asphalt Roofing Cement: ASTM D4586, asbestos free, of consistency required for application.
I. Reglets: Units of type, material, and profile required, formed to provide secure interlocking of separate reglet and counterflashing pieces, and compatible with flashing indicated with factory-mitered and -welded corners and junctions and with interlocking counterflashing on exterior face, of same metal as reglet.
1. Manufacturers: Subject to compliance with requirements, provide products by one of the following:
a. Cheney Flashing Company.
b. Fry Reglet Corporation.
c. Heckmann Building Products, Inc.
d. Hohmann & Barnard, Inc.
2. Material: Stainless steel, 0.0188 inch thick Aluminum, 0.024 inch thick.
3. Surface-Mounted Type: Provide with slotted holes for fastening to substrate, with neoprene or other suitable weatherproofing washers, and with channel for sealant at top edge.
4. Finish: Mill.
2.5 FABRICATION, GENERAL
A. Custom fabricate sheet metal flashing and trim to comply with details indicated and recommendations in cited sheet metal standard that apply to design, dimensions, geometry, metal thickness, and other characteristics of item required.
1. Fabricate sheet metal flashing and trim in shop to greatest extent possible.
2. Fabricate sheet metal flashing and trim in thickness or weight needed to comply with performance requirements, but not less than that specified for each application and metal.
3. Verify shapes and dimensions of surfaces to be covered and obtain field measurements for accurate fit before shop fabrication.
4. Form sheet metal flashing and trim to fit substrates without excessive oil-canning, buckling, and tool marks; true to line, levels, and slopes; and with exposed edges folded back to form hems.
5. Conceal fasteners and expansion provisions where possible. Do not use exposed fasteners on faces exposed to view.
B. Fabrication Tolerances:
1. Fabricate sheet metal flashing and trim that is capable of installation to a tolerance of 1/4 inch in 20 feet on slope and location lines indicated on Drawings and within 1/8-inch offset of adjoining faces and of alignment of matching profiles.
2. Fabricate sheet metal flashing and trim that is capable of installation to tolerances specified.

C. Expansion Provisions: Form metal for thermal expansion of exposed flashing and trim.
1. Form expansion joints of intermeshing hooked flanges, not less than 1 inch deep, filled with butyl sealant concealed within joints.
2. Use lapped expansion joints only where indicated on Drawings.
D. Sealant Joints: Where movable, nonexpansion-type joints are required, form metal in accordance with cited sheet metal standard to provide for proper installation of elastomeric sealant.
E. Fabricate cleats and attachment devices from same material as accessory being anchored or from compatible, noncorrosive metal.
F. Fabricate cleats and attachment devices of sizes as recommended by cited sheet metal standard for application, but not less than thickness of metal being secured.
G. Seams:
1. Fabricate nonmoving seams with flat-lock seams. Form seams and seal with elastomeric sealant unless otherwise recommended by sealant manufacturer for intended use. Rivet joints where necessary for strength.
2.6 ROOF-DRAINAGE SHEET METAL FABRICATIONS
A. Downspouts: Fabricate rectangular downspouts to dimensions indicated on drawings. Complete with mitered elbows. Furnish with metal hangers and same materials as downspouts and anchors.
1. Hanger Style: U-Shaped type.
a. Galvanized Steel: 0.022 inch thick.
b. Aluminum-Zinc Alloy-Coated Steel: 0.022 inch thick.
B. Parapet Scuppers: Fabricate scuppers to dimensions required, with closure flange trim to exterior, 4-inch wide wall flanges to interior, and base extending 4 inches beyond cant or tapered strip into field of roof. Fabricate from teh following materials
1. Galvanized Steel: 0.028 inch thick.
2. Aluminum-Zinc Alloy-Coated Steel: 0.028 inch thick.
C. Conductor Heads: Fabricate conductor heads with flanged back and stiffened top edge and of dimensions and shape required, complete with outlet tubes, exterior flange trim, and built-in overflows. Fabricate from the following materials.
1. Galvanized Steel: 0.028 inch thick.
2. Aluminum-Zinc Alloy-Coated Steel: 0.028 inch thick.
2.7 LOW-SLOPE ROOF SHEET METAL FABRICATIONS
A. Roof Edge Flashing (Gravel Stop) and Fascia Cap: Fabricate in minimum 96-inch-long, but not exceeding 12-foot-long sections. Furnish with 6-inch-wide, joint cover plates.
1. Fabricate from the following materials:
a. Galvanized Steel: 0.028 inch thick.
b. Aluminum-Zinc Alloy-Coated Steel: 0.028 inch thick.
B. Copings: Fabricate in minimum 96-inch-long, but not exceeding 12-foot-long, sections. Fabricate joint plates of same thickness as copings. Furnish with continuous cleats to support edge of external leg and interior leg. Miter corners, fasten and seal watertight.
1. Fabricate from the following materials:
a. Galvanized Steel: 0.028 inch thick.
b. Aluminum-Zinc Alloy-Coated Steel: 0.028 inch thick.
C. Base Flashing: Fabricate from the following materials:
1. Galvanized Steel: 0.028 inch thick.
2. Aluminum-Zinc Alloy-Coated Steel: 0.028 inch thick.
D. Counterflashing: Fabricate from the following materials:
1. Galvanized Steel: 0.022 inch thick.
2. Aluminum-Zinc Alloy-Coated Steel: 0.022 inch thick.

PART 3 - EXECUTION
3.1 INSTALLATION OF UNDERLAYMENT
A. Felt Underlayment: Install felt underlayment, wrinkle free, using adhesive to minimize use of mechanical fasteners under sheet metal flashing and trim.
1. Install in shingle fashion to shed water.
2. Lap joints not less than 2 inches.
B. Install slip sheet, wrinkle free, directly on substrate before installing sheet metal flashing and trim.
1. Install in shingle fashion to shed water.
2. Lapp joints not less than 4 inches.

SECTION 076200 - SHEET METAL FLASHING AND TRIM - CONT'D

3.2 INSTALLATION, GENERAL
A. Install sheet metal flashing and trim to comply with details indicated and recommendations of cited sheet metal standard that apply to installation characteristics required unless otherwise indicated on Drawings.
1. Install fasteners, solder, protective coatings, separators, sealants, and other miscellaneous items as required to complete sheet metal flashing and trim system.
2. Install sheet metal flashing and trim true to line, levels, and slopes. Provide uniform, neat seams with minimum exposure of solder and sealant.
3. Anchor sheet metal flashing and trim and other components of the Work securely in place, with provisions for thermal and structural movement.
4. Install sheet metal flashing and trim to fit substrates and to result in watertight performance.
5. Install continuous cleats with fasteners spaced not more than 12 inches o.c.
6. Install exposed sheet metal flashing and trim with limited oil-canning, and free of buckling and tool marks.
7. Do not field cut sheet metal flashing and trim by torch.
B. Metal Protection: Where dissimilar metals contact each other, or where metal contacts pressure-treated wood or other corrosive substrates, protect against galvanic action or corrosion by painting contact surfaces with bituminous coating or by other permanent separation as recommended by sheet metal manufacturer or cited sheet metal standard.
1. Coat concealed side of sheet metal flashing and trim with bituminous coating where flashing and trim contact wood, ferrous metal, or cementitious construction.
2. Underlayment: Where installing sheet metal flashing and trim directly on cementitious or wood substrates, install underlayment and cover with slip sheet.
C. Expansion Provisions: Provide for thermal expansion of exposed flashing and trim.
1. Space movement joints at maximum of 10 feet with no joints within 24 inches of corner or intersection.
2. Form expansion joints of intermeshing hooked flanges, not less than 1 inch deep, filled with sealant concealed within joints.
D. Fasteners: Use fastener sizes that penetrate wood blocking or sheathing not less than 1-1/4 inches for nails and not less than 3/4 inch for wood screws.
E. Conceal fasteners and expansion provisions where possible in exposed work and locate to minimize possibility of leakage. Cover and seal fasteners and anchors as required for a tight installation.
F. Seal joints as required for watertight construction.
1. Use sealant-filled joints unless otherwise indicated.
a. Embed hooked flanges of joint members not less than 1 inch into sealant.
b. Form joints to completely conceal sealant.
c. When ambient temperature at time of installation is between 40 and 70 deg F, set joint members for 50 percent movement each way.
d. Adjust setting proportionately for installation at higher ambient temperatures.
1) Do not install sealant-type joints at temperatures below 40 deg F.
2. Prepare joints and apply sealants to comply with requirements in Section 079200 "Joint Sealants."
G. Soldered Joints: Clean surfaces to be soldered, removing oils and foreign matter.
1. Pretin edges of sheets with solder to width of 1-1/2 inches; however, reduce pretinning where pretinned surface would show in completed Work.
2. Do not solder metallic-coated steel and aluminum sheet.
3. Do not pretin zinc-tin alloy-coated copper.
4. Do not use torches for soldering.
5. Heat surfaces to receive solder, and flow solder into joint.
a. Fill joint completely.
b. Completely remove flux and spatter from exposed surfaces.
H. Rivets: Rivet joints in uncoated aluminum and zinc where necessary for strength.
3.3 INSTALLATION OF ROOF-DRAINAGE SYSTEM
A. Install sheet metal roof-drainage items to produce complete roof-drainage system in accordance with cited sheet metal standard unless otherwise indicated. Coordinate installation of roof perimeter flashing with installation of roof-drainage system.
B. Downspouts:
1. Join sections with 1-1/2-inch telescoping joints.
2. Provide hangers with fasteners designed to hold downspouts securelt to walls.
3. Locate hangers at top and bottom and at approximately 60 inches o.c.
4. Connect downspouts to underground drainage system
C. Parapet Scuppers:
1. Continuously support scupper, set to correct elevation, and seakl flanges to interior wall face, over cants or tapered edge strips, and under roofing membrane.
2. Anchor scupper closure trim flange to exterior wall and solder or seal with elastometric sealant to scupper.
3. Looselt lock front edge of scupper with conductor head.
4. Solder or seal with elastometric sealant exterior wall scupper flanges into back of conductor head.
D. Conductor Heads: Anchor securely to wall, with elevation of conductor head trim at minimum of 1 inch below scupper discharge.

3.4 INSTALLATION OF ROOF FLASHINGS
A. Install sheet metal flashing and trim to comply with performance requirements, sheet metal manufacturer's written installation instructions, and cited sheet metal standard.
1. Provide concealed fasteners where possible, and set units true to line, levels, and slopes.
2. Install work with laps, joints, and seams that are permanently watertight and weather resistant.
B. Roof Edge Flashing:
1. Install roof edge flashings in accordance with ANSI/SPRI/FM 4435/ES-1.
2. Anchor to resist uplift and outward forces in accordance with recommendations in cited sheet metal standard unless otherwise indicated. Interlock bottom edge of roof edge flashing with continuous cleat anchored to substrate at staggered 3-inch centers.
C. Copings:
1. Install roof edge flashings in accordance with ANSI/SPRI/FM 4435/ES-1.
2. Anchor to resist uplift and outward forces in accordance with recommendations in cited sheet metal standard unless otherwise indicated.
a. Interlock exterior bottom edge of coping with continuous cleat anchored to substrate at 16-inch centers.
b. Anchor interior leg of coping with washers and screw fasteners through slotted holes at 24-inch centers.
D. Counterflashing: Coordinate installation of counterflashing with installation of base flashing.
1. Insert counterflashing in reglets or receivers and fit tightly to base flashing.
2. Extend counterflashing 4 inches over base flashing.
3. Lap counterflashing joints minimum of 4 inches.
3.5 INSTALLATION TOLERANCES
A. Installation Tolerances: Shim and align sheet metal flashing and trim within installed tolerance of 1/4 inch in 20 feet on slope and location lines indicated on Drawings and within 1/8-inch offset of adjoining faces and of alignment of matching profiles.
3.6 CLEANING
A. Clean exposed metal surfaces of substances that interfere with uniform oxidation and weathering.
B. Clean and neutralize flux materials. Clean off excess solder.
C. Clean off excess sealants.
3.7 PROTECTION
A. Remove temporary protective coverings and strippable films as sheet metal flashing and trim are installed unless otherwise indicated in manufacturer's written installation instructions.
B. Replace sheet metal flashing and trim that have been damaged or that have deteriorated beyond successful repair by finish touchup or similar minor repair procedures, as determined by Architect.

END OF SECTION

SECTION 077200 - ROOF ACCESSORIES

PART 1 - GENERAL
1.1 SUMMARY
A. Section Includes:
1. Roof curbs.
2. Roof hatches.
1.2 ACTION SUBMITTALS
A. Product Data: For each type of roof accessory.
B. Shop Drawings: For roof accessories.
C. Samples: For each exposed product and for each color and texture specified.
1.3 INFORMATIONAL SUBMITTALS
A. Sample warranties.
1.4 CLOSEOUT SUBMITTALS
A. Operation and maintenance data.
1.5 WARRANTY
A. Special Warranty on Painted Finishes: Manufacturer's standard form in which manufacturer agrees to repair finishes or replace roof accessories that show evidence of deterioration of factory-applied finishes within 20 years from date of Substantial Completion.

PART 2 - PRODUCTS
2.1 ROOF HATCHES
A. Roof Hatches: Metal roof-hatch units with lids and insulated double-walled curbs, welded or mechanically fastened and sealed corner joints, continuous lid-to-curb counterflashing and weathertight perimeter gasketing, straight sides, and integrally formed deck-mounting flange at perimeter bottom.
1. Manufacturers: Subject to compliance with requirements, provide products by one of the following:
a. Architectural Specialties, Inc.
b. Babcock-Davis.
c. BILCO Company (The).
d. Dur-Red Products.
e. Metallic Products Corp.
f. Milcor; a division of Hart & Cooley, Inc.
g. Nystrom
2. Type and Size: Single-leaf lid, 30 by 36 inches.
3. Loads: Minimum 40-lbf/sq. ft. external live load and 30-lbf/sq. ft. internal uplift load.
a. When release is actuated, lid shall open against 10-lbf/sq. ft. snow or wind load and lock in position.
4. Curb, Framing, and Lid Material: Zinc-coated (galvanized) steel sheet.
a. Thickness: Manufacturer's standard thickness for hatch size indicated.
b. Finish: Baked enamel or powder coat.
c. Color: As selected by Architect from manufacturer's full range.
5. Curb, Framing, and Lid Material: Aluminum sheet.
a. Thickness: Manufacturer's standard thickness for hatch size indicated.
b. Finish: Baked enamel or powder coat.
c. Color: As selected by Architect from manufacturer's full range.
6. Construction:
a. Insulation: 2-inch-thick, polyisocyanurate board.
1) R-Value: 12.0 according to ASTM C1363.
b. Nailer: Factory-installed wood nailer continuous around hatch perimeter.
c. Hatch Lid: Opaque, insulated, and double walled, with manufacturer's standard metal liner of same material and finish as outer metal lid.
d. Exterior Curb Liner: Manufacturer's standard, of same material and finish as metal curb.
e. Fabricate curbs to minimum height of 12 inches above roofing surface unless otherwise indicated.
f. Sloping Roofs: Where slope or roof deck exceeds 1:48, fabricate curb with perimeter curb height that is tapered to accommodate roof slope so that top surfaces of perimeter curb are level. Equip hatch with water diverter or cricket on side that obstructs water flow.
7. Hardware: Manufacturer's standard stainless steel; with hinges, hold-open devices, and independent manual-release devices for inside operation of lids.
8. Provide telecsoping ladder assist post.
2.2 METAL MATERIALS
A. Zinc-Coated (Galvanized) Steel Sheet: ASTM A653/A653M, G90 coating designation.
1. Baked-Enamel or Powder-Coat Finish: After cleaning and pretreating, apply manufacturer's standard two-coat, baked-on finish consisting of prime coat and thermosetting topcoat to a minimum dry film thickness of 2 mils.
2. Concealed Finish: Pretreat with manufacturer's standard white or light-colored acrylic or polyester-backer finish consisting of prime coat and wash coat, with a minimum total dry film thickness of 0.5 mil.
B. Aluminum-Zinc Alloy-Coated Steel Sheet: ASTM A792/A792M, AZ50 coated.
1. Baked-Enamel or Powder-Coat Finish: After cleaning and pretreating, apply manufacturer's standard two-coat, baked-on finish consisting of prime coat and thermosetting topcoat to a minimum dry film thickness of 2 mils.
2. Concealed Finish: Pretreat with manufacturer's standard white or light-colored acrylic or polyester-backer finish consisting of prime coat and wash coat, with a minimum total dry film thickness of 0.5 mil.
C. Aluminum Sheet: ASTM B209, manufacturer's standard alloy for finish required, with temper to suit forming operations and performance required.
1. Baked-Enamel or Powder-Coat Finish: AAMA 2603 except with a minimum dry film thickness of 1.5 mils. Comply with coating manufacturer's written instructions for cleaning, conversion coating, and applying and baking finish.
2. Concealed Finish: Pretreat with manufacturer's standard white or light-colored acrylic or polyester-backer finish consisting of prime coat and wash coat, with a minimum total dry film thickness of 0.5 mil.
D. Aluminum Extrusions and Tubes: ASTM B221, manufacturer's standard alloy and temper for type of use, finished to match assembly where used; otherwise mill finished.
E. Stainless Steel Sheet and Shapes: ASTM A240/A240M or ASTM A666, Type 304.
F. Steel Shapes: ASTM A36/A36M, hot-dip galvanized according to ASTM A123/A123M unless otherwise indicated.
G. Steel Tube: ASTM A500/A500M, round tube.
H. Galvanized-Steel Tube: ASTM A500/A500M, round tube, hot-dip galvanized according to ASTM A123/A123M.
I. Steel Pipe: ASTM A53/A53M, galvanized.
2.3 MISCELLANEOUS MATERIALS
A. Provide materials and types of fasteners, protective coatings, sealants, and other miscellaneous items required by manufacturer for a complete installation.
B. Polyisocyanurate Board Insulation: ASTM C1289, thickness and thermal resistivity as indicated.
C. Wood Nailers: Softwood lumber, pressure treated with waterborne preservatives for aboveground use, acceptable to authorities having jurisdiction, containing no arsenic or chromium, and complying with AWPA C2; not less than 1-1/2 inches thick.
D. Fasteners: Roof accessory manufacturer's recommended fasteners suitable for application and metals being fastened. Match finish of exposed fasteners with finish of material being fastened. Provide nonremovable fastener heads to exterior exposed fasteners. Furnish the following unless otherwise indicated:
E. Gaskets: Manufacturer's standard tubular or fingered design of neoprene, EPDM, PVC, or silicone or a flat design of foam rubber, sponge neoprene, or cork.

SECTION 077200 - ROOF ACCESSORIES CONT'D

F. Elastomeric Sealant: ASTM C920, elastomeric polymer sealant as recommended by roof accessory manufacturer for installation indicated; low modulus; of type, grade, class, and use classifications required to seal joints and remain watertight.
G. Butyl Sealant: ASTM C1311, single-component, solvent-release butyl rubber sealant; polyisobutylene plasticized; heavy bodied for expansion joints with limited movement.

PART 3 - EXECUTION
3.1 INSTALLATION
A. Verify dimensions of roof openings for roof accessories. Install roof accessories according to manufacturer's written instructions.
1. Install roof accessories level; plumb; true to line and elevation; and without warping, jogs in alignment, buckling, or tool marks.
2. Anchor roof accessories securely in place so they are capable of resisting indicated loads.
3. Use fasteners, separators, sealants, and other miscellaneous items as required to complete installation of roof accessories and fit them to substrates.
4. Install roof accessories to resist exposure to weather without failing, rattling, leaking, or loosening of fasteners and seals.
B. Metal Protection: Protect metals against galvanic action by separating dissimilar metals from contact with each other or with corrosive substrates by painting contact surfaces with bituminous coating or by other permanent separation as recommended by manufacturer.
1. Coat concealed side of uncoated aluminum roof accessories with bituminous coating where in contact with wood, ferrous metal, or cementitious construction.
2. Underlayment: Where installing roof accessories directly on cementitious or wood substrates, install a course of underlayment and cover with manufacturer's recommended slip sheet.
C. Seal joints with elastomeric sealant as required by roof accessory manufacturer.
3.2 REPAIR AND CLEANING
A. Galvanized Surfaces: Clean field welds, bolted connections, and abraded areas and repair galvanizing according to ASTM A780/A780M.
B. Touch up factory-primed surfaces with compatible primer ready for field painting according to Section 099113 "Exterior Painting."
C. Clean exposed surfaces according to manufacturer's written instructions.
D. Replace roof accessories that have been damaged or that cannot be successfully repaired by finish touchup or similar minor repair procedures.

END OF SECTION

SECTION 078413 - PENETRATION FIRESTOPPING

PART 1 - GENERAL
1.1 SUMMARY
A. Section Includes:
1. Penetrations in fire-resistance-rated walls.
2. Penetrations in smoke barriers.
1.2 ACTION SUBMITTALS
A. Product Data: For each type of product.
1.3 QUALITY ASSURANCE
A. Installer Qualifications: A firm that has been approved by FM Global according to FM Global 4991, "Approval of Firestop Contractors," or been evaluated by UL and found to comply with its "Qualified Firestop Contractor Program Requirements."

PART 2 - PRODUCTS
2.1 PERFORMANCE REQUIREMENTS
A. Fire-Test-Response Characteristics:
1. Perform penetration firestopping system tests by a qualified testing agency acceptable to authorities having jurisdiction.
2. Test per testing standards referenced in "Penetration Firestopping Systems" Article. Provide rated systems complying with the following requirements:
a. Penetration firestopping systems shall bear classification marking of a qualified testing agency.
1) UL in its "Fire Resistance Directory."
2.2 PENETRATION FIRESTOPPING SYSTEMS
A. Penetration Firestopping Systems: Systems that resist spread of fire, passage of smoke and other gases, and maintain original fire-resistance rating of construction penetrated. Penetration firestopping systems shall be compatible with one another, with the substrates forming openings, and with penetrating items if any.
1. Manufacturers: Subject to compliance with requirements, provide products by one of the following:
a. 3M Fire Protection Products.
b. Hilti, Inc.
c. Specified Technologies, Inc.
d. Tremco, Inc.
B. Penetrations in Fire-Resistance-Rated Walls: Penetration firestopping systems with ratings determined per ASTM E 814 or UL 1479, based on testing at a positive pressure differential of 0.01-inch wg.
1. F-Rating: Not less than the fire-resistance rating of constructions penetrated.
C. Penetrations in Smoke Barriers: Penetration firestopping systems with ratings determined per UL 1479, based on testing at a positive pressure differential of 0.30-inch wg.
1. L-Rating: Not exceeding 5.0 cfm/sq. ft. of penetration opening at and no more than 50-cfm cumulative total for any 100 sq. ft. at both ambient and elevated temperatures.
D. Exposed Penetration Firestopping Systems: Flame-spread and smoke-developed indexes of less than 25 and 450, respectively, per ASTM E 84.
E. Accessories: Provide components for each penetration firestopping system that are needed to install fill materials and to maintain ratings required. Use only those components specified by penetration firestopping system manufacturer and approved by qualified testing and inspecting agency for conditions indicated.

PART 3 - EXECUTION
3.1 INSTALLATION
A. Examine substrates and conditions, with Installer present, for compliance with requirements for opening configurations, penetrating items, substrates, and other conditions affecting performance of the Work.
B. General: Install penetration firestopping systems to comply with manufacturer's written installation instructions and published drawings for products and applications.
C. Install forming materials and other accessories of types required to support fill materials during their application and in the position needed to produce cross-sectional shapes and depths required to achieve fire ratings.
1. After installing fill materials and allowing them to fully cure, remove combustible forming materials and other accessories not forming permanent components of firestopping.
D. Install fill materials by proven techniques to produce the following results:
1. Fill voids and cavities formed by openings, forming materials, accessories and penetrating items to achieve required fire-resistance ratings.
2. Apply materials so they contact and adhere to substrates formed by openings and penetrating items.
3. For fill materials that will remain exposed after completing the Work, finish to produce smooth, uniform surfaces that are flush with adjoining finishes.

END OF SECTION

SECTION 078443 - JOINT FIRESTOPPING

PART 1 - GENERAL
1.1 SUMMARY
A. Section Includes:
1. Joints in or between fire-resistance-rated constructions.
2. Joints in smoke barriers.
1.2 ACTION SUBMITTALS
A. Product Data: For each type of product.
B. Product Schedule: For each joint firestopping system. Include location, illustration of firestopping system, and design designation of qualified testing agency.
1. Engineering Judgments: Where Project conditions require modification to a qualified testing agency's illustration for a particular joint firestopping system condition, submit illustration, with modifications marked, approved by joint firestopping system manufacturer's fire-protection engineer as an engineering judgment or equivalent fire-resistance-rated assembly.

PART 2 - PRODUCTS
2.1 PERFORMANCE REQUIREMENTS
A. Fire-Test-Response Characteristics:
1. Perform joint firestopping system tests by a qualified testing agency acceptable to authorities having jurisdiction.
2. Test per testing standards referenced in "Joint Firestopping Systems" Article. Provide rated systems complying with the following requirements:
a. Joint firestopping systems shall bear classification marking of a qualified testing agency.
1) UL in its "Fire Resistance Directory."
2.2 JOINT FIRESTOPPING SYSTEMS
A. Joint Firestopping Systems: Systems that resist spread of fire, passage of smoke and other gases, and maintain original fire-resistance rating of assemblies in or between which joint firestopping systems are installed. Joint firestopping systems shall accommodate building movements without impairing their ability to resist the passage of fire and hot gases.
B. Joints in or between Fire-Resistance-Rated Construction: Provide joint firestopping systems with ratings determined per ASTM E 1966 or UL 2079.
1. Fire-Resistance Rating: Equal to or exceeding the fire-resistance rating of the wall, floor, or roof in or between which it is installed.
C. Joints in Smoke Barriers: Provide fire-resistive joint systems with ratings determined per UL 2079 based on testing at a positive pressure differential of 74.7 Pa .
1. L-Rating: Not exceeding 5.0 cfm/ft. of joint at both ambient and elevated temperatures.
D. Exposed Joint Firestopping Systems: Flame-spread and smoke-developed indexes of less than 25 and 450, respectively, as determined per ASTM E 84.
E. Accessories: Provide components of fire-resistive joint systems, including primers and forming materials, that are needed to install elastomeric fill materials and to maintain ratings required. Use only components specified by joint firestopping system manufacturer and approved by the qualified testing agency for conditions indicated.

PART 3 - EXECUTION
3.1 INSTALLATION
A. General: Install fire-resistive joint systems to comply with manufacturer's written installation instructions and published drawings for products and applications indicated.
B. Install forming materials and other accessories of types required to support elastomeric fill materials during their application and in position needed to produce cross-sectional shapes and depths required to achieve fire ratings indicated.
1. After installing elastomeric fill materials and allowing them to fully cure, remove combustible forming materials and other accessories not indicated as permanent components of fire-resistive joint system.
C. Install elastomeric fill materials for fire-resistive joint systems by proven techniques to produce the following results:
1. Elastomeric fill voids and cavities formed by joints and forming materials as required to achieve fire-resistance ratings indicated.
2. Apply elastomeric fill materials so they contact and adhere to substrates formed by joints.
3. For elastomeric fill materials that will remain exposed after completing the Work, finish to produce smooth, uniform surfaces that are flush with adjoining finishes.

END OF SECTION

SECTION 079200 - JOINT SEALANTS

PART 1 - GENERAL
1.1 SUMMARY
A. Section Includes:
1. Nonstaining silicone joint sealants.
2. Urethane joint sealants.
3. Mildew-resistant joint sealants.
4. Latex joint sealants.
1.2 ACTION SUBMITTALS
A. Product Data: For each joint-sealant product.
1.3 WARRANTY
A. Special Installer's Warranty: Installer agrees to repair or replace joint sealants that do not comply with performance and other requirements specified in this Section within specified warranty period.
1. Warranty Period: Two years from date of Substantial Completion.
B. Special Manufacturer's Warranty: Manufacturer agrees to furnish joint sealants to repair or replace those joint sealants that do not comply with performance and other requirements specified in this Section within specified warranty period.
1. Warranty Period: Five years from date of Substantial Completion.

PART 2 - PRODUCTS
2.1 JOINT SEALANTS, GENERAL
A. VOC Content of Interior Sealants: Sealants and sealant primers used inside the weatherproofing system shall comply with the following:
1. Architectural sealants shall have a VOC content of 250 g/L or less.
2. Sealants and sealant primers for nonporous substrates shall have a VOC content of 250 g/L or less.
B. Low-Emitting Interior Sealants: Sealants and sealant primers shall comply with the testing and product requirements of the California Department of Health's (formerly, the California Department of Health Services') "Standard Method for the Testing and Evaluation of Volatile Organic Chemical Emissions from Indoor Sources Using Environmental Chambers."
C. Colors of Exposed Joint Sealants: As selected by Architect from manufacturer's full range.

2.2 URETHANE JOINT SEALANTS
A. Urethane, S, NS, 25, NT: Single-component, nonsag, nontraffic-use, plus 25 percent and minus 25 percent movement capability, urethane joint sealant; ASTM C 920, Type S, Grade NS, Class 25, Use NT.
1. Products: Subject to compliance with requirements, available products that may be incorporated into the Work include, but are not limited to, the following:
a. BASF Construction Chemicals, LLC, Building Systems; Sonalastic TX1.
b. Pecora Corporation; Dynatrol I-XL.
c. Sherwin-Williams Company (The); Stampede-1.
d. Sika Corporation U.S.; Sikaflex Textured Sealant.
e. Tremco Incorporated; Dymonic.

SECTION 079200 - JOINT SEALANTS - CONT'D

B. Urethane, S, P, 25, T, NT: Single-component, pourable, plus 25 percent and minus 25 percent movement capability, traffic- and nontraffic-use, urethane joint sealant; ASTM C 920, Type S, Grade P, Class 25, Uses T and NT.
1. Products: Subject to compliance with requirements, available products that may be incorporated into the Work include, but are not limited to, the following:
a. BASF Construction Chemicals, LLC, Building Systems; Sonolastic SL 1.
b. Pecora Corporation; NR-201.
c. Sherwin-Williams Company (The); Stampede 1SL.
C. Urethane, M, NS, 50, T, NT: Multicomponent, nonsag, plus 50 percent and minus 50 percent movement capability, traffic- and nontraffic-use, urethane joint sealant; ASTM C 920, Type M, Grade NS, Class 50, Uses T and NT.
1. Products: Subject to compliance with requirements, available products that may be incorporated into the Work include, but are not limited to, the following:
a. Tremco Incorporated; Dymeric 240.
D. Urethane, M, P, 25, T, NT: Multicomponent, pourable, plus 25 percent and minus 25 percent movement capability, traffic- and nontraffic-use, urethane joint sealant; ASTM C 920, Type M, Grade P, Class 25, Uses T and NT.
1. Products: Subject to compliance with requirements, available products that may be incorporated into the Work include, but are not limited to, the following:
a. Pecora Corporation; Dynatrol II SG
b. Sherwin-Williams Company (The); Stampede-2SL.
c. Tremco Incorporated; THC 900/901.
2.3 MILDEW-RESISTANT JOINT SEALANTS
A. Mildew-Resistant Joint Sealants: Formulated for prolonged exposure to humidity with fungicide to prevent mold and mildew growth.
B. Silicone, Mildew Resistant, Acid Curing, S, NS, 25, NT: Mildew-resistant, single-component, nonsag, plus 25 percent and minus 25 percent movement capability, nontraffic-use, acid-curing silicone joint sealant; ASTM C 920, Type S, Grade NS, Class 25, Use NT.
1. Products: Subject to compliance with requirements, available products that may be incorporated into the Work include, but are not limited to, the following:
a. Dow Corning Corporation; 786-M White.
b. GE Construction Sealants; SCS1700 Sanitary.
c. Tremco Incorporated; Tremsil 200.
2.4 LATEX JOINT SEALANTS
A. Acrylic Latex: Acrylic latex or siliconized acrylic latex, ASTM C 834, Type OP, Grade NF.
1. Products: Subject to compliance with requirements, available products that may be incorporated into the Work include, but are not limited to, the following:
a. BASF Construction Chemicals, LLC, Building Systems; Sonolac.
b. May National Associates, Inc., a subsidiary of Sika Corporation U.S.; Bondaflex 600, Bondaflex Sil-A 700.
c. Pecora Corporation; AC-20.
d. Sherwin-Williams Company (The); 850A, 950A, PowerHouse.
e. Tremco Incorporated; Tremflex 834.
2.5 JOINT-SEALANT BACKING
A. Cylindrical Sealant Backings: ASTM C 1330, Type C (closed-cell material with a surface skin), Type O (open-cell material), Type B (bicellular material with a surface skin), or any of the preceding types, as approved in writing by joint-sealant manufacturer for joint application indicated, and of size and density to control sealant depth and otherwise contribute to producing optimum sealant performance.
1. Manufacturers: Subject to compliance with requirements, available manufacturers offering products that may be incorporated into the Work include, but are not limited to, the following:
a. BASF Construction Chemicals, LLC, Building Systems.
b. Construction Foam Products, a division of Nomaco, Inc.
B. Bond-Breaker Tape: Polyethylene tape or other plastic tape recommended by sealant manufacturer.

PART 3 - EXECUTION
3.1 PREPARATION
A. Surface Cleaning of Joints: Clean out joints immediately before installing joint sealants to comply with joint-sealant manufacturer's written instructions and the following requirements:
1. Remove laitance and form-release agents from concrete.
2. Clean nonporous joint substrate surfaces with chemical cleaners or other means that do not stain, harm substrates, or leave residues capable of interfering with adhesion.
B. Joint Priming: Prime joint substrates where recommended by joint-sealant manufacturer or as indicated by preconstruction joint-sealant-substrate tests or prior experience.
C. Masking Tape: Use masking tape where required to prevent contact of sealant or primer with adjoining surfaces.
3.2 INSTALLATION OF JOINT SEALANTS
A. General: Comply with ASTM C 1193 and joint-sealant manufacturer's written installation instructions for products and applications indicated, unless more stringent requirements apply.
B. Install sealant backings of kind indicated to support sealants during application and at position required to produce cross-sectional shapes and depths of installed sealants relative to joint widths that allow optimum sealant movement capability.
C. Install bond-breaker tape behind sealants where sealant backings are not used between sealants and backs of joints.
D. Install sealants using proven techniques that comply with the following and at the same time backings are installed:
1. Place sealants so they directly contact and fully wet joint substrates.
2. Completely fill recesses in each joint configuration.
3. Produce uniform, cross-sectional shapes and depths relative to joint widths that allow optimum sealant movement capability.
E. Tooling of Nonsag Sealants: Immediately after sealant application and before skinning or curing begins, tool sealants to form smooth, uniform beads of configuration indicated. Use tooling agents that are approved in writing by sealant manufacturer and that do not discolor sealants or adjacent surfaces.
1. Provide concave joint profile per Figure 8A in ASTM C 1193 unless otherwise indicated.
3.3 JOINT-SEALANT SCHEDULE
A. Joint-Sealant Application: Exterior joints in horizontal traffic surfaces.
1. Joint Locations:
a. Isolation and contraction joints in cast-in-place concrete slab
b. Joints between different materials listed above.
c. Other joints as indicated on Drawings.
2. Joint Sealant: Urethane, M, P, 25, T, NT.
3. Joint-Sealant Color: As selected by Architect from manufacturer's full range of colors.
B. Joint-Sealant Application: Exterior joints in vertical surfaces and horizontal nontraffic surfaces.
1. Joint Locations:
a. Construction joints in cast-in-place concrete.
b. Other joints as indicated on Drawings.
2. Joint Sealant: Urethane, M, NS, 50, T NT.
3. Joint-Sealant Color: As selected by Architect from manufacturer's full range of colors.
C. Joint-Sealant Application: Interior joints in vertical surfaces and horizontal nontraffic surfaces.
1. Joint Locations:
a. Control and expansion joints on exposed interior surfaces of exterior walls.
b. Tile control and expansion joints.
c. Vertical joints on exposed surfaces of concrete, walls, and partitions.
d. Other joints as indicated on Drawings.
2. Joint Sealant: Urethane, S, NS, 25, NT.
3. Joint-Sealant Color: As selected by Architect from manufacturer's full range of colors.
D. Joint-Sealant Application: Interior joints in vertical surfaces and horizontal nontraffic surfaces not subject to significant movement.
1. Joint Locations:
a. Control joints on exposed interior surfaces of exterior walls.
b. Perimeter joints between interior wall surfaces and frames of interior doors, windows and elevator entrances.
c. Other joints as indicated on Drawings.
2. Joint Sealant: Acrylic latex.
3. Joint-Sealant Color: As selected by Architect from manufacturer's full range of colors.
E. Joint-Sealant Application: Concealed mastics.
1. Joint Locations:
a. Aluminum thresholds.
b. Sill plates.
c. Other joints as indicated on Drawings.
2. Joint Sealant: Butyl-rubber based.
3. Joint-Sealant Color: As selected by Architect from manufacturer's full range of colors.

END OF SECTION

SECTION 081113 - HOLLOW METAL DOORS AND FRAMES

PART 1 - GENERAL
1.1 SUMMARY
A. Section includes hollow-metal doors and frames.
B. Exterior insulated hollow metal doors.
1.2 ACTION SUBMITTALS
A. Product Data: For each type of product.
B. Shop Drawings: Include elevations, door edge details, frame profiles, metal thicknesses, preparations for hardware, and other details.
C. Schedule: Prepared by or under the supervision of supplier, using same reference numbers for details and openings as those on Drawings.

PART 2 - PRODUCTS
2.1 MANUFACTURERS
A. Manufacturers: Subject to compliance with requirements, available manufacturers offering products that may be incorporated into the Work include, but are not limited to, the following:
1. Amweld International, LLC.
2. Ceco Door Products; an Assa Abloy Group company.
3. Curries Company; an Assa Abloy Group company.
4. Republic Doors and Frames.
5. Steelcraft; an Ingersoll-Rand company.
2.2 INTERIOR AND EXTERIOR HOLLOW-METAL DOORS AND FRAMES
A. Extra-Heavy-Duty Doors and Frames: SDI A250.8, Level 3. .
1. Physical Performance: Level A according to SDI A250.4.
2. Doors:
a. Type: As indicated in the Door and Frame Schedule.
b. Thickness: 1-3/4 inches.
c. Face: Metallic-coated steel sheet, minimum thickness of 0.053 inch, with minimum A40 coating. Interior doors may be CRS.
d. Edge Construction: Model 2, Seamless.
e. Core: Manufacturer's standard MATERIAL; insulation material where required at exterior wall locations, or as required adjacent to refrigerated spaces.
3. Thermal-Rated Doors: Provide doors fabricated with thermal-resistance value (R-value) of not less than R=10 when tested according to ASTM C 1363.
4. Frames:
a. Materials: Metallic-coated steel sheet, minimum thickness of 0.053 inch, with minimum A40 coating. Interior frames may be CRS.
b. Construction: Full profile welded.
c. Profile: Match existing frame profiles at borrowed lite framing and doors.
5. Exposed Finish: Prime.
2.3 FABRICATION
A. Hollow-Metal Doors:
1. Exterior Doors: Provide weep-hole openings in bottoms of exterior doors to permit moisture to escape. Seal joints in top edges of doors against water penetration.
B. Hollow-Metal Frames: Where frames are fabricated in sections due to shipping or handling limitations, provide alignment plates or angles at each joint, fabricated of same thickness metal as frames.
1. Door Silencers: Except on weather-stripped frames, drill stops to receive door silencers.
a. Single-Door Frames: Drill stop in strike jamb to receive three door silencers.
b. Double-Door Frames: Drill stop in head jamb to receive two door silencers.
C. At exterior frames, provide a 1/8-inch integral kerf formed into the frame to receive a gasket composed of a cellular modified foam core clad in embossed, non vinyl, paint resistant liner which is UV stabilized. Gasket is to be provided as a part of this section. Do not install until frame has been painted.
D. Hardware Preparation: Factory prepare hollow-metal work to receive templated mortised hardware; include cutouts, reinforcement, mortising, drilling, and tapping according to SDI A250.6, the Door Hardware Schedule, and templates.
E. Stops and Moldings: Provide stops and moldings around glazed lites and louvers where indicated. Form corners of stops and moldings with butted or mitered hairline joints.
1. Single Glazed Lites: Provide fixed stops and moldings welded on secure side of hollow-metal work.
2. Provide fixed frame moldings on outside of exterior and on secure side of interior doors and frames.
3. Provide loose stops and moldings on inside of hollow-metal work.
4. Coordinate rabbet width between fixed and removable stops with glazing and installation types indicated.
2.4 STEEL FINISHES
A. Prime Finish: Clean, pretreat, and apply manufacturer's standard primer.
1. Shop Primer: SDI A250.10.

PART 3 - EXECUTION
3.1 INSTALLATION
A. Hollow-Metal Frames: Install hollow-metal frames of size and profile indicated. Comply with SDI A250.11 or NAAMM-HMMA 840 as required by standards specified.
1. Set frames accurately in position; plumbed, aligned, and braced securely until permanent anchors are set. After wall construction is complete, remove temporary braces, leaving surfaces smooth and undamaged.
a. At fire-rated openings, install frames according to NFPA 80.
b. Where frames are fabricated in sections because of shipping or handling limitations, field splice at approved locations by welding face joint continuously; grind, fill, dress, and make splice smooth, flush, and invisible on exposed faces.
c. Install frames with removable stops located on secure side of opening.

SECTION 081113 - HOLLOW METAL DOORS AND FRAMES - CONT'D

d. Edge Construction: Model 2, Seamless.
e. Core: Manufacturer's standard MATERIAL; insulation material where required at exterior wall locations, or as required adjacent to refrigerated spaces.
3. Thermal-Rated Doors: Provide doors fabricated with thermal-resistance value (R-value) of not less than R=10 when tested according to ASTM C 1363.
4. Frames:
a. Materials: Metallic-coated steel sheet, minimum thickness of 0.053 inch, with minimum A40 coating. Interior frames may be CRS.
b. Construction: Full profile welded.
c. Profile: Match existing frame profiles at borrowed lite framing and doors.
5. Exposed Finish: Prime.
2.3 FABRICATION
A. Hollow-Metal Doors:
1. Exterior Doors: Provide weep-hole openings in bottoms of exterior doors to permit moisture to escape. Seal joints in top edges of doors against water penetration.
B. Hollow-Metal Frames: Where frames are fabricated in sections due to shipping or handling limitations, provide alignment plates or angles at each joint, fabricated of same thickness metal as frames.
1. Door Silencers: Except on weather-stripped frames, drill stops to receive door silencers.
a. Single-Door Frames: Drill stop in strike jamb to receive three door silencers.
b. Double-Door Frames: Drill stop in head jamb to receive two door silencers.
C. At exterior frames, provide a 1/8-inch integral kerf formed into the frame to receive a gasket composed of a cellular modified foam core clad in embossed, non vinyl, paint resistant liner which is UV stabilized. Gasket is to be provided as a part of this section. Do not install until frame has been painted.
D. Hardware Preparation: Factory prepare hollow-metal work to receive templated mortised hardware; include cutouts, reinforcement, mortising, drilling, and tapping according to SDI A250.6, the Door Hardware Schedule, and templates.
E. Stops and Moldings: Provide stops and moldings around glazed lites and louvers where indicated. Form corners of stops and moldings with butted or mitered hairline joints.
1. Single Glazed Lites: Provide fixed stops and moldings welded on secure side of hollow-metal work.
2. Provide fixed frame moldings on outside of exterior and on secure side of interior doors and frames.
3. Provide loose stops and moldings on inside of hollow-metal work.
4. Coordinate rabbet width between fixed and removable stops with glazing and installation types indicated.
2.4 STEEL FINISHES
A. Prime Finish: Clean, pretreat, and apply manufacturer's standard primer.
1. Shop Primer: SDI A250.10.

PART 3 - EXECUTION
3.1 INSTALLATION
A. Hollow-Metal Frames: Install hollow-metal frames of size and profile indicated. Comply with SDI A250.11 or NAAMM-HMMA 840 as required by standards specified.
1. Set frames accurately in position; plumbed, aligned, and braced securely until permanent anchors are set. After wall construction is complete, remove temporary braces, leaving surfaces smooth and undamaged.
a. At fire-rated openings, install frames according to NFPA 80.
b. Where frames are fabricated in sections because of shipping or handling limitations, field splice at approved locations by welding face joint continuously; grind, fill, dress, and make splice smooth, flush, and invisible on exposed faces.
c. Install frames with removable stops located on secure side of opening.
d. Install door silencers in frames before grouting.
e. Remove temporary braces necessary for installation only after frames have been properly set and secured.
f. Check plumb, square, and twist of frames as walls are constructed. Shim as necessary to comply with installation tolerances.
g. Provide blockouts at exterior doors for electrical door strike/latches.
h. Provide conduit from strike at jamb to 6” above door frame or to accessible ceiling space, whichever is longer.
i. 2-inch x 4-inch electrical boxes shall be installed in all exterior frames. Install the electrical boxes at the lock edge of the door rabbet area for future magnetic locks or contacts by others, for connection to building security system (coordinate with electrical drawings). Installation of the electrical boxes shall be by a licensed electrician, frame supplier/installer shall coordinate this work with the General Contractor prior to frame installation, see electrical drawings for details.
2. Masonry Walls: Coordinate installation of frames to allow for solidly filling space between frames and masonry with grout.
3. Installation Tolerances: Adjust hollow-metal door frames for squareness, alignment, twist, and plumb to the following tolerances:
a. Squareness: Plus or minus 1/16 inch, measured at door rabbet on a line 90 degrees from jamb perpendicular to frame head.
b. Alignment: Plus or minus 1/16 inch, measured at jambs on a horizontal line parallel to plane of wall.
c. Twist: Plus or minus 1/16 inch, measured at opposite face corners of jambs on parallel lines, and perpendicular to plane of wall.
d. Plumbness: Plus or minus 1/16 inch, measured at jambs at floor.
B. Hollow-Metal Doors: Fit hollow-metal doors accurately in frames, within clearances specified below. Shim as necessary.
1. Non-Fire-Rated Steel Doors:
a. Between Door and Frame Jambs and Head: 1/8 inch plus or minus 1/32 inch.
b. Between Edges of Pairs of Doors: 1/8 inch to 1/4 inch plus or minus 1/32 inch.
c. At Bottom of Door: 3/4 inch plus or minus 1/32 inch.
d. Between Door Face and Stop: 1/16 inch to 1/8 inch plus or minus 1/32 inch.

END OF SECTION

SECTION 083613 - SECTIONAL DOORS

PART 1 - GENERAL
1.1 SUMMARY
A. Section includes manually operated sectional doors.
1.2 ACTION SUBMITTALS
A. Product Data: For each type and size of sectional door and accessory.
B. Shop Drawings: For each installation and for special components not dimensioned or detailed in manufacturer's product data. Include plans, elevations, sections, details, and attachments to other work.
1.3 WARRANTY
A. Special Warranty: Manufacturer’s standard form in which manufacturer agrees to repair or replace components of sectional doors that fail in materials or workmanship within specified warranty period.
1. Warranty Period: Five years from date of Substantial Completion.
B. Special Finish Warranty: Manufacturer’s standard form in which manufacturer agrees to repair or replace components that show evidence of deterioration of factory-applied finishes within specified warranty period.
1. Warranty Period: 10 years from date of Substantial Completion.

PART 2 - PRODUCTS
2.1 PERFORMANCE REQUIREMENTS
A. General Performance: Sectional doors shall comply with performance requirements specified without failure due to defective manufacture, fabrication, installation, or other defects in construction and without requiring temporary installation of reinforcing components.
B. Structural Performance: Exterior sectional doors shall withstand the effects of gravity loads, and the following loads and stresses within limits and under conditions indicated according to ASCE/SEI 7.
1. Design Wind Load: Uniform pressure (velocity pressure) of (20 lbf/sq. ft.), acting inward and outward.
a. Basic Wind Speed: (90 mph).
b. Importance Factor: (1.15).
c. Exposure Category: C.
2.2 DOOR ASSEMBLY
A. Steel and Aluminum Sectional Door: Sectional door formed with hinged sections and fabricated according to DASMA 102 unless otherwise indicated.
1. Subject to compliance with requirements, provide products by one of the following:
a. Raynor Garage Door Co. Model ThermaSeal TM 175-20.
b. Midland Garage Door Model 3” Energy Saver 20 Gauge.
c. Overhead Door Corporation Model 596 Series.
B. Operation Cycles: Door components and operators capable of operating for not less than 100,000. One operation cycle is complete when a door is opened from the closed position to the fully open position and returned to the closed position.
C. R-Value: Minimum R-17.0, U-Value of .0588, when tested in accordance with ASTM C236-87.
D. Steel Sections: 20 gauge minimum, zinc-coated (galvanized) steel sheet with (G60) zinc coating.
1. Section Thickness: 2 inches.
2. Exterior-Face Surface: Textured/Stucco.
3. Interior Facing Material: Zinc-coated (galvanized) steel sheet.
E. Aluminum Sections: Full vision.
F. Track Configurations: As indicated.
G. Weatherseals: Fitted to bottom and top and around entire perimeter of door. Provide combination bottom weatherseal and sensor edge at doors with electric operators.
H. Locking Devices: At doors without electric operators, equip door with locking device assembly.
1. Locking Device Assembly: Single-jamb side locking bar, operable from outside with cylinder and inside with thumbturn.
I. Door Finish:
1. Aluminum Finish: Anodized color as selected by Architect from manufacturer's full range.
2.3 Finish of Interior Facing Material: Manufacturer’s standard finish and color.2.4 ALUMINUM DOOR SECTIONS
A. Sections: Extruded-aluminum stile and rail members with dimensions and profiles as indicated on Drawings; members joined by welding or with concealed, aluminum or nonmagnetic stainless-steel through bolts, full height of door section; and with meeting rails shaped to provide a weather-resistant seal.
1. Reinforce sections with continuous horizontal and diagonal reinforcement, as required to stiffen door and for wind loading. Ensure that reinforcement does not obstruct vision lites.
2. Provide reinforcement for hardware attachment.
B. Full-Vision Sections: Manufacturer's standard, tubular, aluminum-framed section fully glazed with 6-mm-thick, clear acrylic glazing set in vinyl, rubber, or neoprene glazing channel and with removable extruded-vinyl or aluminum stops.
2.4 TRACKS, SUPPORTS, AND ACCESSORIES
A. Tracks: Provide 3” heavy-duty, galvanized-steel track system of configuration indicated, sized as indicated in Drawings, designed for lift type indicated and clearances indicated on Drawings. Provide complete system including brackets, bracing, and reinforcement to ensure rigid support of ball-bearing roller guides for required door type, size, weight, and loading.
B. Weatherseals: Replaceable, adjustable, continuous, compressible weather-stripping gaskets of flexible vinyl, rubber, or neoprene fitted to bottom and top of sectional door unless otherwise indicated.
2.5 COUNTERBALANCE MECHANISM
A. Torsion Spring: Counterbalance mechanism consisting of adjustable-tension torsion springs fabricated from steel-spring wire complying with ASTM A 229/A 229M, mounted on torsion shaft made of steel tube or solid steel. Provide springs designed for number of operation cycles indicated.

ISSUE DATE: 10/18/2024
REVISIONS:
No.: DATE: BY: DESCRIPTION:

DESIGNED: NJB
DRAWN: NJB
CHECKED: DJK

ARCHITECT
DANIEL J. KERNS
A-4463
10/17/24
STATE OF NEBRASKA

SCHEMMER
Design with Purpose. Build with Confidence.
1044 North 115th Street, Suite 300, Omaha, Nebraska 68154 | 402.493.4800
CA0666

LANOHA DEVELOPMENT
HAWTHORNE COURT MULTI-TENANT BUILDING
17662 WELCH PLAZA
OMAHA, NE 68154
ARCHITECTURAL SPECS

PROJECT NO.: 010347.001

A 02

C:\Users\nbeesch\Documents\Revit_temp\010347001-ARCH_R23_nbeesch.rvt
10/17/2024 10:10:13 AM

SECTION 083613 - SECTIONAL DOORS - CONT'D

PART 3 - EXECUTION
3.1 INSTALLATION
A. Install sectional doors and operating equipment complete with necessary hardware, anchors, inserts, hangers, and equipment supports; according to manufacturer's written instructions and as specified.
B. Tracks: Provide sway bracing, diagonal bracing, and reinforcement as required for rigid installation of track and door-operating equipment.
C. Adjust hardware and moving parts to function smoothly so that doors operate easily, free of warp, twist, or distortion.

END OF SECTION

SECTION 084113 - ALUMINUM-FRAMED ENTRANCES AND STOREFRONTS

PART 1 - GENERAL
1.1 SUMMARY
A. Section Includes:
1. Aluminum-framed storefront systems.
2. Aluminum-framed entrance door systems.
1.2 PREINSTALLATION MEETINGS
A. Preinstallation Conference: Conduct conference at Project site.
1.3 ACTION SUBMITTALS
A. Product Data: For each type of product.
B. Shop Drawings: For aluminum-framed entrances and storefronts. Include plans, elevations, sections, full-size details, and attachments to other work.
1. Show connection to and continuity with adjacent thermal, weather, air, and vapor barriers.
2. Include point-to-point wiring diagrams.
C. Samples: For each type of exposed finish required.
D. Entrance Door Hardware Schedule: Prepared by or under supervision of supplier, detailing fabrication and assembly of entrance door hardware, as well as procedures and diagrams.
E. Delegated-Design Submittal: For aluminum-framed entrances and storefronts, including analysis data signed and sealed by the qualified professional engineer responsible for their preparation.
1.4 INFORMATIONAL SUBMITTALS
A. Energy Performance Certificates: NFRC-certified energy performance values from manufacturer.
B. Product test reports.
C. Source quality-control reports.
D. Field quality-control reports.
E. Sample warranties.
1.5 CLOSEOUT SUBMITTALS
A. Maintenance data.
1.6 QUALITY ASSURANCE
A. Installer Qualifications: An entity that employs installers and supervisors who are trained and approved by manufacturer and that employs a qualified glazing contractor for this Project who is certified under the North American Contractor Certification Program (NACC) for Architectural Glass & Metal (AG&M) contractors and that employs glazing technicians certified under the Architectural Glass and Metal Technician (AGMT) certification program.
B. Product Options: Information on Drawings and in Specifications establishes requirements for aesthetic effects and performance characteristics of assemblies. Aesthetic effects are indicated by dimensions, arrangements, alignment, and profiles of components and assemblies as they relate to sightlines, to one another, and to adjoining construction.
1. Do not change intended aesthetic effects, as judged solely by Architect, except with Architect's approval. If changes are proposed, submit comprehensive explanatory data to Architect for review.
1.7 WARRANTY
A. Special Warranty: Manufacturer agrees to repair or replace components of aluminum-framed entrances and storefronts that do not comply with requirements or that fail in materials or workmanship within specified warranty period.
1. Warranty Period: Two years from date of Substantial Completion.
B. Special Finish Warranty, Factory-Applied Finishes: Standard form in which manufacturer agrees to repair finishes or replace aluminum that shows evidence of deterioration of baked-enamel, powder-coat, or organic finishes within specified warranty period.
1. Warranty Period: Five years from date of Substantial Completion.
C. Special Finish Warranty, Anodized Finishes: Standard form in which manufacturer agrees to repair finishes or replace aluminum that shows evidence of deterioration of anodized finishes within specified warranty period.
1. Warranty Period: Five years from date of Substantial Completion.

PART 2 - PRODUCTS
2.1 PERFORMANCE REQUIREMENTS
A. Delegated Design: Engage a qualified professional engineer to design aluminum-framed entrances and storefronts.
B. General Performance: Comply with performance requirements specified, as determined by testing of aluminum-framed entrances and storefronts representing those indicated for this Project without failure due to defective manufacture, fabrication, installation, or other defects in construction.
1. Aluminum-framed entrances and storefronts shall withstand movements of supporting structure, including, but not limited to, twist, column shortening, long-term creep, and deflection from uniformly distributed and concentrated live loads.
2. Failure also includes the following:
a. Thermal stresses transferring to building structure.
b. Glass breakage.
c. Noise or vibration created by wind and thermal and structural movements.
d. Loosening or weakening of fasteners, attachments, and other components.
e. Failure of operating units.
C. Structural Loads:
1. Wind Loads: As indicated on Drawings.
2. Other Design Loads: As indicated on Drawings.
D. Deflection of Framing Members Supporting Glass: At design wind load, as follows:
1. Deflection Normal to Wall Plane: Limited to 1/175 of clear span for spans of up to 13 feet 6 inches and to 1/240 of clear span plus 1/4 inch for spans greater than 13 feet 6 inches.
2. Deflection Parallel to Glazing Plane: Limited to amount not exceeding that which reduces glazing bite to less than 75 percent of design dimension and that which reduces edge clearance between framing members and glazing or other fixed components to less than 1/8 inch.
a. Operable Units: Provide a minimum 1/16-inch clearance between framing members and operable units.
E. Structural: Test according to ASTM E330/E330M as follows:
1. When tested at positive and negative wind-load design pressures, storefront assemblies, including entrance doors, do not evidence deflection exceeding specified limits.
2. When tested at 150 percent of positive and negative wind-load design pressures, storefront assemblies, including entrance doors and anchorage, do not evidence material failures, structural distress, or permanent deformation of main framing members exceeding 0.2 percent of span.
3. Test Durations: As required by design wind velocity, but not less than 10 seconds.
F. Water Penetration under Static Pressure: Test according to ASTM E331 as follows:
1. No evidence of water penetration through fixed glazing and framing areas, including entrance doors, when tested according to a minimum static-air-pressure differential of 20 percent of positive wind-load design pressure, but not less than 6.24 lbf/sq. ft..
G. Energy Performance: Certified and labeled by manufacturer for energy performance as follows:
Options in subparagraphs below are examples only; revise values to suit climate zone of building envelope as defined by the IECC. Testing for visible light transmittance (VT) is specified in Section 088000 "Glazing."
1. Thermal Transmittance (U-factor):
a. Fixed Glazing and Framing Areas: U-factor for the system of not more than 0.45 Btu/sq. ft. x h x deg F as determined according to NFRC 100.
b. Entrance Doors: U-factor of not more than 0.83 Btu/sq. ft. x h x deg F as determined according to NFRC 100.
2. Solar Heat-Gain Coefficient (SHGC):
a. Fixed Glazing and Framing Areas: SHGC for the system of not more than 0.45 as determined according to NFRC 200.
b. Entrance Doors: SHGC of not more than 0.45 as determined according to NFRC 200.
3. Air Leakage:
a. Fixed Glazing and Framing Areas: Air leakage for the system of not more than 0.06 cfm/sq. ft. at a static-air-pressure differential of 1.57 lbf/sq. ft. when tested according to ASTM E283.
b. Entrance Doors: Air leakage of not more than 1.0 cfm/sq. ft. at a static-air-pressure differential of 1.57 lbf/sq. ft..
4. Condensation Resistance Factor (CRF):
a. Fixed Glazing and Framing Areas: CRF for the system of not less than 70 as determined according to AAMA 1503.
b. Entrance Doors: CRF of not less than 63 as determined according to AAMA 1503.
H. Thermal Movements: Allow for thermal movements resulting from ambient and surface temperature changes.
1. Temperature Change: 120 deg F, ambient; 180 deg F, material surfaces.
2.2 STOREFRONT SYSTEMS
A. Manufacturers: Subject to compliance with requirements, provide products by one of the following:
1. EFCO Corporation.
2. Kawneer North America, an Arconic company.
3. Oldcastle BuildingEnvelope.
4. Trulite Glass & Aluminum Solutions, LLC.
5. Tubelite Inc.
6. U.S. Aluminum; a brand of C.R. Laurence.
B. Framing Members: Manufacturer's extruded- or formed-aluminum framing members of thickness required and reinforced as required to support imposed loads.
1. Exterior Framing Construction: Thermally broken.
2. Interior Vestibule Framing Construction: Nonthermal.
3. Glazing System: Retained mechanically with gaskets on four sides and retained mechanically with gaskets on two sides and structural sealant on two sides.
4. Finish: Baked-enamel or powder-coat finish.
5. Fabrication Method: Field-fabricated stick system.
6. Aluminum: Alloy and temper recommended by manufacturer for type of use and finish indicated.
7. Steel Reinforcement: As required by manufacturer.
C. Backer Plates: Manufacturer's standard, continuous backer plates for framing members, if not integral, where framing abuts adjacent construction.
D. Brackets and Reinforcements: Manufacturer's standard high-strength aluminum with nonstaining, nonferrous shims for aligning system components.
2.3 ENTRANCE DOOR SYSTEMS
A. Manufacturers: Subject to compliance with requirements, provide products by one of the following:
1. EFCO Corporation.
2. Kawneer North America, an Arconic company.
3. Oldcastle BuildingEnvelope.
4. Trulite Glass & Aluminum Solutions, LLC.
5. Tubelite Inc.
6. U.S. Aluminum; a brand of C.R. Laurence.
B. Entrance Doors: Manufacturer's standard glazed entrance doors for manual-swing or automatic operation.
1. Door Construction: 1-3/4-inch overall thickness, with minimum 0.125-inch- thick, extruded-aluminum tubular rail and stile members. Mechanically fasten corners with reinforcing brackets that are deeply penetrated and fillet welded or that incorporate concealed tie rods.
2. Door Design: Wide stile; 5-inch nominal width.
3. Glazing Stops and Gaskets: Beveled, snap-on, extruded-aluminum stops and preformed gaskets.
a. Provide nonremovable glazing stops on outside of door.
2.4 ENTRANCE DOOR HARDWARE
A. Entrance Door Hardware: Hardware not specified in this Section is specified in Section 087100 "Door Hardware."
B. General: Provide entrance door hardware and entrance door hardware sets indicated in door and frame schedule for each entrance door, to comply with requirements in this Section.
1. Entrance Door Hardware Sets: Provide quantity, item, size, finish or color indicated, and products equivalent in function and comparable in quality to named products.
2. Sequence of Operation: Provide electrified door hardware function, sequence of operation, and interface with other building control systems indicated.
3. Opening-Force Requirements:
a. Egress Doors: Not more than 15 lbf to release the latch and not more than 30 lbf to set the door in motion and not more than 15 lbf to open the door to its minimum required width.
b. Accessible Interior Doors: Not more than 5 lbf to fully open door.
C. Designations: Requirements for design, grade, function, finish, quantity, size, and other distinctive qualities of each type of entrance door hardware are indicated in "Entrance Door Hardware Sets" Article. Products are identified by using entrance door hardware designations as follows:

D. Continuous-Gear Hinges: BHMA A156.26.
E. Mortise Auxiliary Locks: BHMA A156.5, Grade 1.
F. Manual Flush Bolts: BHMA A156.16, Grade 1.
G. Automatic and Self-Latching Flush Bolts: BHMA A156.3, Grade 1.
H. Panic Exit Devices: BHMA A156.3, Grade 1, listed and labeled by a testing and inspecting agency acceptable to authorities having jurisdiction, for panic protection, based on testing according to UL 305.
I. Cylinders:
1. BHMA A156.5, Grade 1.
a. Keying: Master key system. Permanently inscribe each key with a visual key control number and include notation "DO NOT DUPLICATE".
J. Strikes: Provide strike with black-plastic dust box for each latch or lock bolt; fabricated for aluminum framing.
K. Operating Trim: BHMA A156.6.
L. Closers: BHMA A156.4, Grade 1, with accessories required for a complete installation, sized as required by door size, exposure to weather, and anticipated frequency of use; adjustable to comply with field conditions and requirements for opening force.
M. Concealed Overhead Holders and Stops: BHMA A156.8, Grade 1.
N. Door Stops: BHMA A156.16, Grade 1, floor or wall mounted, as appropriate for door location indicated, with integral rubber bumper.
O. Weather Stripping: Manufacturer's standard replaceable components.
1. Compression Type: Made of ASTM D2000 molded neoprene or ASTM D2287 molded PVC.
P. Weather Sweeps: Manufacturer's standard exterior-door bottom sweep with concealed fasteners on mounting strip.
Q. Thresholds: BHMA A156.21 raised thresholds beveled with a slope of not more than 1:2, with maximum height of 1/2 inch.

SECTION 084113 - ALUMINUM-FRAMED ENTRANCES AND STOREFRONTS CONT'D

2.5 GLAZING
A. Glazing: Comply with Section 088000 "Glazing."
B. Glazing Gaskets: Manufacturer's standard sealed-corner pressure-glazing system of black, resilient elastomeric glazing gaskets, setting blocks, and shims or spacers.
C. Glazing Sealants: As recommended by manufacturer.
2.6 MATERIALS
A. Sheet and Plate: ASTM B209.
B. Extruded Bars, Rods, Profiles, and Tubes: ASTM B221.
C. Structural Profiles: ASTM B308/B308M.
D. Steel Reinforcement:
1. Structural Shapes, Plates, and Bars: ASTM A36/A36M.
2. Cold-Rolled Sheet and Strip: ASTM A1008/A1008M.
3. Hot-Rolled Sheet and Strip: ASTM A1011/A1011M.
E. Steel Reinforcement Primer: Manufacturer's standard zinc-rich, corrosion-resistant primer complying with SSPC-PS Guide No. 12.00; applied immediately after surface preparation and pretreatment. Select surface preparation methods according to recommendations in SSPC-SP COM, and prepare surfaces according to applicable SSPC standard.
2.7 FABRICATION
A. Form or extrude aluminum shapes before finishing.
B. Weld in concealed locations to greatest extent possible to minimize distortion or discoloration of finish. Remove weld spatter and welding oxides from exposed surfaces by descaling or grinding.
C. Fabricate components that, when assembled, have the following characteristics:
1. Profiles that are sharp, straight, and free of defects or deformations.
2. Accurately fitted joints with ends coped or mitered.
3. Physical and thermal isolation of glazing from framing members.
4. Accommodations for thermal and mechanical movements of glazing and framing to maintain required glazing edge clearances.
5. Provisions for field replacement of glazing from exterior.
6. Fasteners, anchors, and connection devices that are concealed from view to greatest extent possible.
D. Mechanically Glazed Framing Members: Fabricate for flush glazing without projecting stops.
E. Entrance Door Frames: Reinforce as required to support loads imposed by door operation and for installing entrance door hardware.
F. Entrance Doors: Reinforce doors as required for installing entrance door hardware.
G. Entrance Door Hardware Installation: Factory install entrance door hardware to the greatest extent possible. Cut, drill, and tap for factory-installed entrance door hardware before applying finishes.
H. After fabrication, clearly mark components to identify their locations in Project according to Shop Drawings.
2.8 ALUMINUM FINISHES
A. Baked-Enamel or Powder-Coat Finish: AAMA 2603 except with a minimum dry film thickness of 1.5 mils. Comply with coating manufacturer's written instructions for cleaning, conversion coating, and applying and baking finish.
1. Color and Gloss: Finish to be selected by Owner from manufacturer's full color product line.

PART 3 - EXECUTION
3.1 INSTALLATION, GENERAL
A. Comply with manufacturer's written instructions.
B. Do not install damaged components.
C. Fit joints to produce hairline joints free of burrs and distortion.
D. Rigidly secure nonmovement joints.
E. Install anchors with separators and isolators to prevent metal corrosion and electrolytic deterioration and to prevent impeding movement of moving joints.
F. Seal perimeter and other joints watertight unless otherwise indicated.
G. Metal Protection:
1. Where aluminum is in contact with dissimilar metals, protect against galvanic action by painting contact surfaces with materials recommended by manufacturer for this purpose or by installing nonconductive spacers.
2. Where aluminum is in contact with concrete or masonry, protect against corrosion by painting contact surfaces with bituminous paint.
H. Set continuous sill members and flashing in full sealant bed, as specified in Section 079200 "Joint Sealants," to produce weathertight installation.
I. Install joint filler behind sealant as recommended by sealant manufacturer.
J. Install components plumb and true in alignment with established lines and grades.
3.2 INSTALLATION OF GLAZING
A. Install glazing as specified in Section 088000 "Glazing."
3.3 INSTALLATION OF ALUMINUM-FRAMED ENTRANCE DOORS
A. Install entrance doors to produce smooth operation and tight fit at contact points.
1. Exterior Doors: Install to produce weathertight enclosure and tight fit at weather stripping.
2. Field-Installed Entrance Door Hardware: Install surface-mounted entrance door hardware according to entrance door hardware manufacturers' written instructions using concealed fasteners to greatest extent possible.

END OF SECTION

SECTION 087100 - DOOR HARDWARE

PART 1 - GENERAL
1.1 SUMMARY
A. Section includes:
1. Mechanical door hardware for the following:
a. Swinging doors.
2. Cylinders for door hardware specified in other Sections.
1.2 SUBMITTALS
A. Product Data: For each type of product indicated. Include construction and installation details, material descriptions, dimensions of individual components and profiles, and finishes.
1.3 QUALITY ASSURANCE
A. Source Limitations: Obtain each type of door hardware from a single manufacturer.
B. Means of Egress Doors: Latches do not require more than 15 lbf (67 N) to release the latch. Locks do not require use of a key, tool, or special knowledge for operation.
C. Accessibility Requirements: For door hardware on doors in an accessible route, comply with the U.S. Architectural & Transportation Barriers Compliance Board's ADA-ABA Accessibility Guidelines and ICC/ANSI A117.1.
1. Provide operating devices that do not require tight grasping, pinching, or twisting of the wrist and that operate with a force of not more than 5 lbf (22.2 N).
2. Comply with the following maximum opening-force requirements:
a. Interior, Non-Fire-Rated Hinged Doors: 5 lbf (22.2 N) applied perpendicular to door.
3. Bevel raised thresholds with a slope of not more than 1:2. Provide thresholds not more than 1/2 inch (13 mm) high.
4. Adjust door closer sweep periods so that, from an open position of 70 degrees, the door will take at least 3 seconds to move to a point 3 inches (75 mm) from the latch, measured to the leading edge of the door.
1.4 WARRANTY
A. Special Warranty: Manufacturer's standard form in which manufacturer agrees to repair or replace components of door hardware that fail in materials or workmanship within specified warranty period.
1. Warranty Period: Three years from date of Substantial Completion, unless otherwise indicated.
a. Exit Devices: Two years from date of Substantial Completion.
b. Manual Closers: 10 years from date of Substantial Completion.
PART 2 - PRODUCTS
2.1 SCHEDULED DOOR HARDWARE
A. Provide door hardware for each door as scheduled in Part 3 "Door Hardware Schedule" to comply with requirements in this Section.
1. Door Hardware Sets: Provide quantity, item, size, finish or color indicated, and named manufacturers' products.
B. Coordinate all Keying requirements with owner. Provide a Master Key System.

PART 3 - EXECUTION
3.1 EXAMINATION
A. Examine doors and frames, with Installer present, for compliance with requirements for installation tolerances, wall and floor construction, and other conditions affecting performance.
B. Examine roughing-in for electrical power systems to verify actual locations of wiring connections before electrified door hardware installation.
C. Proceed with installation only after unsatisfactory conditions have been corrected.
3.2 PREPARATION
A. Steel Doors and Frames: For surface applied door hardware, drill and tap doors and frames according to ANSI/SDI A250.6.
3.3 INSTALLATION
A. Mounting Heights: Mount door hardware units at heights to comply with the following unless otherwise indicated or required to comply with governing regulations.
1. Standard Steel Doors and Frames: ANSI/SDI A250.8.
B. Install each door hardware item to comply with manufacturer's written instructions. Where cutting and fitting are required to install door hardware onto or into surfaces that are later to be painted or finished in another way, coordinate removal, storage, and reinstallation of surface protective trim units with finishing work specified in Division 09 Sections. Do not install surface-mounted items until finishes have been completed on substrates involved.
1. Set units level, plumb, and true to line and location. Adjust and reinforce attachment substrates as necessary for proper installation and operation.
2. Drill and countersink units that are not factory prepared for anchorage fasteners. Space fasteners and anchors according to industry standards.

3.4 LIST OF MANUFACTURERS

	Specified	**Approved**
Hinges	McKinney	Best
Continuous Hinges	Pemko	ABH
Locks & Cylinders	Corbin Russwin	Best
Exit Devices	Corbin Russwin	Precision
Electric Strikes	HES	RCI
Overhead Stops	Rixson	ABH
Closers	Norton	Corbin Russwin
Plates, Stops, Pulls	Rockwood	Trimco
Thresholds, Seals	Pemko	National Guard
Door Position Switches	Securitron	SDC
Exit Button	Alarm Controls	SDC
Power Supplies	Securitron	Precision

3.5 HARDWARE SCHEDULE

Hardware Set No. 1
(Door No. 100-2, 100-4, 100-6, 100-7, 100-8, 100-9)

1 Each Continuous Hinge, KBSPFM_HD1
1 Each Rim Exit Device, ED5800 K157ET M52 6P, BSP
1 Each Pull, BF157 Type 12, BSP
1 Each Closer, UNI7500, BSP
1 Each Threshold, by Door Supplier
1 Set Weatherstrip, by Door Supplier

Operational Description: Doors are normally closed and secure. Key override will manually retract latchbolt at active leaf allowing entry. Ingress allowed when latchbolts are held retracted by mechanical keyed dogging. Egress free at all times by depressing exit device pushpads.

Hardware Set No. 2
(Door No. 101)

3 Each Hinge, TA2314 x NRP 4.5 x 4.5, US26D
1 Each Storeroom Lockset, CLX3357 NZD, 626
1 Each Closer, UNI7500, 689
1 Each Kick Plate, K1050 8” x 2” LDW, US32D
1 Each Threshold, 171A
1 Set Perimeter Seal, by Section 081113
1 Each Door Sweep, 315CN
1 Each Drip Cap, 346C
1 Each Door Position Switch, DPS-M-BK

Door position switch to monitor door being held open for extended time period or for after-hours intrusion detection (time to be determined by owner).

Hardware Set No. 3
(Door No. 100-1, 100-3, 100-5)

Complete by Door Supplier

END OF SECTION

SECTION 088000 - GLAZING

PART 1 - GENERAL
1.1 SUMMARY
A. This section includes glazing for the following:
1. Insulated glass.
1.2 ACTION SUBMITTALS
A. Product Data: For each glass product and glazing material indicated.
1.3 INFORMATIONAL SUBMITTALS
A. Preconstruction adhesion and compatibility test report.
1.4 QUALITY ASSURANCE
A. Safety Glazing Labeling: Where safety glazing labeling is indicated, permanently mark glazing with certification label of the SGCC or another certification agency acceptable to authorities having jurisdiction. Label shall indicate manufacturer's name, type of glass, thickness, and safety glazing standard with which glass complies.
B. Fire-Protection-Rated Glazing Labeling: Permanently mark fire-protection-rated glazing with certification label of a testing agency acceptable to authorities having jurisdiction. Label shall indicate manufacturer's name, test standard, whether glazing is for use in fire doors or other openings, whether or not glazing passes hose-stream test, whether or not glazing has a temperature rise rating of 250 deg C (450 deg F), and the fire-resistance rating in minutes.
C. Insulating-Glass Certification Program: Permanently marked either on spacers or on at least one component lite of units with appropriate certification label of IGCC.
1.5 WARRANTY
A. Manufacturer's Special Warranty for Coated-Glass Products: Manufacturer's standard form in which coated-glass manufacturer agrees to replace coated-glass units that deteriorate within specified warranty period. Deterioration of coated glass is defined as defects developed from normal use that are not attributed to glass breakage or to maintaining and cleaning coated glass contrary to manufacturer's written instructions. Defects include peeling, cracking, and other indications of deterioration in coating.
1. Warranty Period: 10 years from date of Substantial Completion.
B. Manufacturer's Special Warranty on Insulating Glass: Manufacturer's standard form in which insulating-glass manufacturer agrees to replace insulating-glass units that deteriorate within specified warranty period. Deterioration of insulating glass is defined as failure of hermetic seal under normal use that is not attributed to glass breakage or to maintaining and cleaning insulating glass contrary to manufacturer's written instructions. Evidence of failure is the obstruction of vision by dust, moisture, or film on interior surfaces of glass.
1. Warranty Period: 10 years from date of Substantial Completion.

PART 2 - PRODUCTS
2.1 MANUFACTURERS
A. Provide monolithic glass by one of following companies.
1. AFG Industries, Inc.
2. Falconer Glass Industries, Div. of Guardian Industries Corp.
3. Guardian Industries Corp.
4. PPG Industries, Inc.
5. Pelkington/LOF.
6. Saint-Gobain.
B. Insulated glass units
1. Basis of Design: PPG Solarban 60, low-E, Solar gray.
C. Spandrel Insulated glass units
1. Basis of Design: PPG Solarban 60, low-E, Solar gray.
2.2 GLASS PRODUCTS
A. Float Glass: ASTM C 1036, Type I, Quality-Q3, Class I (clear) unless otherwise indicated.
B. Heat-Treated Float Glass: ASTM C 1048; Type I; Quality-Q3; Class I (clear) unless otherwise indicated; of kind and condition indicated.
C. Safety Glazing: Where safety glazing is indicated, provide glazing that complies with 16 CFR 1201, Category II.
2.3 INSULATING GLASS
A. Insulating-Glass Units: Factory-assembled units consisting of sealed lites of glass separated by a dehydrated interspace, qualified according to ASTM E 2190, and complying with other requirements specified.
1. Sealing System: Dual seal.
2. Spacer: Manufacturer's standard spacer material and construction.
2.4 GLAZING GASKETS
A. Dense Compression Gaskets: Molded or extruded gaskets of profile and hardness required to maintain watertight seal, made from one of the following:
1. Neoprene complying with ASTM C 864.
2. EPDM complying with ASTM C 864.
3. Silicone complying with ASTM C 1115.
4. Thermoplastic polyolefin rubber complying with ASTM C 1115.
PART 3 - EXECUTION
3.1 GLAZING, GENERAL
A. Comply with combined written instructions of manufacturers of glass, sealants, gaskets, and other glazing materials, unless more stringent requirements are indicated, including those in referenced glazing publications.
3.2 GASKET GLAZING (DRY)
A. Cut compression gaskets to lengths recommended by gasket manufacturer to fit openings exactly, with allowance for stretch during installation.
B. Insert soft compression gasket between glass and frame or fixed stop so it is securely in place with joints miter cut and bonded together at corners.
C. Installation with Drive-in Wedge Gaskets: Center glass lites in openings on setting blocks and press firmly against soft compression gasket by inserting dense compression gaskets formed and installed to lock in place against faces of removable stops. Start gasket applications at corners and work toward centers of openings. Compress gaskets to produce a weathertight seal without developing bending stresses in glass. Seal gasket joints with sealant recommended by gasket manufacturer.
D. Installation with Pressure-Glazing Stops: Center glass lites in openings on setting blocks and press firmly against soft compression gasket. Install dense compression gaskets and pressure-glazing stops, applying pressure uniformly to compression gaskets. Compress gaskets to produce a weathertight seal without developing bending stresses in glass. Seal gasket joints with sealant recommended by gasket manufacturer.
E. Install gaskets so they protrude past face of glazing stops

END OF SECTION

SECTION 092216 - NON-STRUCTURAL METAL FRAMING

PART 1 - GENERAL
1.1 SUMMARY
A. Section Includes:
1. Non-load-bearing steel framing systems for interior gypsum board assemblies.
2. Suspension systems for interior gypsum ceilings and soffits.
1.2 ACTION SUBMITTALS
A. Product Data: For each type of product.

PART 2 - PRODUCTS
2.1 FRAMING SYSTEMS
A. Steel Studs and Runners: ASTM C 645. Use either steel studs and runners or dimpled steel studs and runners of equivalent minimum base-metal thickness.
1. Minimum Base-Metal Thickness: 0.033 inches.
2. Depth: As indicated on Drawings.
B. Slip-Type Head Joints: Where indicated, provide the following in thickness not less than indicated for studs and in width to accommodate depth of studs:
1. Double-Runner System: ASTM C 645 top runners, inside runner with 51-mm- (2-inch-) deep flanges and fastened to studs, and outer runner sized to friction fit inside runner.
C. Cold-Rolled Channel Bridging: Steel, 0.053-inch minimum base-metal thickness, with minimum (1/2-inch-) wide flanges.
1. Depth: 1-1/2 inches.
2. Clip Angle: Not less than 1-1/2 by 1-1/2 inches, 0.068-inch- thick, galvanized steel.
2.2 SUSPENSION SYSTEMS
A. Tie Wire: ASTM A 641/A 641M, Class 1 zinc coating, soft temper, 0.062-inch- diameter wire, or double strand of 0.048-inch- diameter wire.
B. Wire Hangers: ASTM A 641/A 641M, Class 1 zinc coating, soft temper, 0.16 inch in diameter.
C. Carrying Channels: Cold-rolled, commercial-steel sheet with a base-metal thickness of 0.053 inch and minimum 1/2-inch- wide flanges.
1. Depth: 2-1/2 inches.
D. Furring Channels:
1. Steel Studs and Runners: ASTM C 645. Use either steel studs and runners or dimpled steel studs and runners of equivalent minimum base-metal thickness.
a. Minimum Base-Metal Thickness: 0.033 inch.
b. Depth: As indicated on Drawings.
2. Hat-Shaped, Z Furring, Rigid Furring Channels: ASTM C 645, 7/8 inch deep.
a. Minimum Base-Metal Thickness: 0.033 inch.
2.3 AUXILIARY MATERIALS
A. Fasteners for Metal Framing: Of type, material, size, corrosion resistance, holding power, and other properties required to fasten steel members to substrates.

PART 3 - EXECUTION
3.1 INSTALLATION, GENERAL
A. Installation Standard: ASTM C 754.
1. Gypsum Board Assemblies: Also comply with requirements in ASTM C 840 that apply to framing installation.
B. Install supplementary framing and blocking to support fixtures and furnishings.
C. Install bracing at terminations in assemblies.
3.2 INSTALLING FRAMED ASSEMBLIES
A. Install framing system components according to spacings indicated, but not greater than spacings required by referenced installation standards for assembly types.
B. Where runners are installed directly against dissimilar metals at exterior walls, install isolation strip between studs and wall.
C. Install studs so flanges within framing system point in same direction.
D. Install tracks (runners) at assembly perimeter.
1. Slip-Type Head Joints: Where framing extends to overhead structural supports, install to produce joints at tops of framing systems that prevent axial loading of finished assemblies.
2. Door Openings: Screw vertical studs at jambs to jamb anchor clips on door frames; install runner track section (for cripple studs) at head and secure to jamb studs.
a. Install two studs at each jamb unless otherwise indicated.
b. Install cripple studs at head adjacent to each jamb stud, with a minimum 13-mm (1/2-inch) clearance from jamb stud to allow for installation of control joint in finished assembly.
c. Extend jamb studs through suspended ceilings and brace to underside of overhead structure.
E. Installation Tolerance: Install each framing member so fastening surfaces vary not more than 1/8 inch from the plane formed by faces of adjacent framing.
3.3 INSTALLING SUSPENSION SYSTEMS
A. Install suspension system components according to spacings indicated, but not greater than spacings required by referenced installation standards for assembly types.
B. Isolate suspension systems from building structure where they abut or are penetrated by building structure to prevent transfer of loading imposed by structural movement.
C. Suspend hangers from building structure as follows:
1. Install hangers plumb and free from contact with insulation or other objects within ceiling plenum that are not part of supporting structural or suspension system.
a. Splay hangers only where required to miss obstructions and offset resulting horizontal forces by bracing, countersplaying, or other equally effective means.
2. Where width of ducts and other construction within ceiling plenum produces hanger spacings that interfere with locations of hangers, install supplemental suspension members and hangers in the form of trapezes or equivalent devices.
3. Do not connect or suspend steel framing from ducts, pipes, or conduit.
D. Installation Tolerances: Install suspension systems that are level to within (1/8 inch in 12 feet) measured lengthwise on each member that will receive finishes and transversely between parallel members that will receive finishes.

END OF SECTION

SECTION 092900 - GYPSUM BOARD

PART 1 - GENERAL
1.1 SUMMARY
A. Section Includes:
1. Interior gypsum board.
1.2 ACTION SUBMITTALS
A. Product Data: For each type of product.

PART 2 - PRODUCTS
2.1 INTERIOR GYPSUM BOARD
A. Manufacturers: Subject to compliance with requirements, available manufacturers offering products that may be incorporated into the Work include, but are not limited to, the following:
1. American Gypsum.
2. Georgia-Pacific Gypsum LLC.
3. National Gypsum Company.
4. USG Corporation.
B. Gypsum Ceiling Board: ASTM C 1396/C 1396M.
1. Thickness: 5/8 inch, Type X.
2. Long Edges: Tapered.
3. All ceilings.
2.2 TRIM ACCESSORIES
A. Interior Trim: ASTM C 1047.
1. Material: Paper-faced galvanized steel sheet or plastic.
2. Shapes:
a. L-Bead: L-shaped; exposed long flange receives joint compound.
b. Expansion (control) joint.
2.3 JOINT TREATMENT MATERIALS
A. General: Comply with ASTM C 475/C 475M.
B. Joint Tape:
1. Interior Gypsum Board: Paper.
C. Joint Compound for Interior Gypsum Board: For each coat use formulation that is compatible with other compounds applied on previous or for successive coats.
1. Prefilling: At open joints and damaged surface areas, use setting-type taping compound.
2. Embedding and First Coat: For embedding tape and first coat on joints, fasteners, and trim flanges, use drying-type, all-purpose compound.
3. Fill Coat: For second coat, use drying-type, all-purpose compound.
4. Finish Coat: For third coat, use setting-type, sandable topping compound.
2.4 AUXILIARY MATERIALS
A. Steel Drill Screws: ASTM C 1002, unless otherwise indicated.
B. Sound Attenuation Blankets: ASTM C 665, Type I (blankets without membrane facing).

PART 3 - EXECUTION
3.1 APPLYING AND FINISHING PANELS
A. Comply with ASTM C 840.
B. Install ceiling panels across framing to minimize the number of abutting end joints and to avoid abutting end joints in central area of each ceiling. Stagger abutting end joints of adjacent panels not less than one framing member.
C. Do not place tapered edges against cut edges or ends.
D. Examine panels before installation. Reject panels that are wet or damaged.
E. Install trim with back flanges intended for fasteners, attach to framing with same fasteners used for panels. Otherwise, attach trim according to manufacturer's written instructions.
1. Edge Trim: Install at perimeter edge of gypsum board at locations indicated in Drawings.
2. Control Joints: Install control joints at locations indicated on Drawings.
F. Form control joints, with double joists spaced (1/2 inch) apart.
G. Prefill open joints and damaged surface areas.
H. Apply joint tape over gypsum board joints, except for trim products specifically indicated as not intended to receive tape.
I. Gypsum Board Finish Levels: Finish panels to levels indicated below and according to ASTM C 840:
1. Level 4: At all interior ceiling surfaces.
2. Level 4: At all interior wall surfaces.
J. Protect adjacent surfaces from drywall compound and finishes and promptly remove from non-drywall surfaces. Repair surfaces stained, marred, or otherwise damaged during drywall application.
K. Remove and replace panels that are wet or damaged.

END OF SECTION

SECTION 099113 - EXTERIOR PAINTING

PART 1 - GENERAL
1.1 SUMMARY
A. Section includes surface preparation and the application of paint systems on the following exterior substrates:
1. Steel and iron.
1.2 ACTION SUBMITTALS
A. Product Data: For each type of product. Include preparation requirements and application instructions.
B. Samples: For each type of paint system and each color and gloss of topcoat.
1.3 MAINTENANCE MATERIAL
A. Provide attic stock of one gallon per color.

PART 2 - PRODUCTS
2.1 MANUFACTURERS
A. Manufacturers: Subject to compliance with requirements, provide products by one of the following:
1. PPG Industries.
2. Benjamin Moore & Co.
3. Diamond Vogel Paints.
4. ICI Paints.
5. Kwal Paint.
6. Sherwin-Williams Company (The).
2.2 PAINT, GENERAL
A. MPI Standards: Products shall comply with MPI standards indicated and shall be listed in its "MPI Approved Products Lists."
B. Material Compatibility:
1. Materials for use within each paint system shall be compatible with one another and substrates indicated, under conditions of service and application as demonstrated by manufacturer, based on testing and field experience.
2. For each coat in a paint system, products shall be recommended in writing by topcoat manufacturers for use in paint system and on substrate indicated.
C. Colors: As selected by Architect from manufacturer's full range.
PART 3 - EXECUTION
3.1 EXAMINATION
A. Examine substrates and conditions, with Applicator present, for compliance with requirements for maximum moisture content and other conditions affecting performance of the Work.
B. Verify suitability of substrates, including surface conditions and compatibility with existing finishes and primers.
C. Proceed with coating application only after unsatisfactory conditions have been corrected.
1. Application of coating indicates acceptance of surfaces and conditions.
3.2 PREPARATION
A. Comply with manufacturer's written instructions and recommendations in "MPI Architectural Painting Specification Manual" applicable to substrates and paint systems indicated.
B. Remove hardware, covers, plates, and similar items already in place that are removable and are not to be painted. If removal is impractical or impossible because of size or weight of item, provide surface-applied protection before surface preparation and painting.
1. After completing painting operations, use workers skilled in the trades involved to reinstall items that were removed. Remove surface-applied protection.
3.3 APPLICATION
A. Apply paints according to manufacturer's written instructions and recommendations in "MPI Manual."
B. Apply paints to produce surface films without cloudiness, spotting, holidays, laps, brush marks, roller tracking, runs, sags, ropiness, or other surface imperfections. Cut in sharp lines and color breaks.
3.4 CLEANING AND PROTECTION
A. Protect work of other trades against damage from paint application. Correct damage to work of other trades by cleaning, repairing, replacing, and refinishing, as approved by Architect, and leave in an undamaged condition.
B. At completion of construction activities of other trades, touch up and restore damaged or defaced painted surfaces.
3.5 EXTERIOR PAINTING SCHEDULE
A. Steel and Iron Substrates:
1. Quick-Dry Enamel System MPI EXT 5.1A:
a. Prime Coat: Primer, alkyd, quick dry, for metal, MPI #76.
b. Intermediate Coat: Alkyd, quick dry, matching topcoat.
c. Topcoat: Alkyd, quick dry, semi-gloss (MPI Gloss Level 5), MPI #81.

END OF SECTION

SECTION 099123 - INTERIOR PAINTING

PART 1 - GENERAL
1.1 SUMMARY
A. Section includes surface preparation and the application of paint systems on interior substrates.
1. Gypsum Board
2. Concrete Masonry Units
3. Steel
1.2 ACTION SUBMITTALS
A. Product Data: For each type of product. Include preparation requirements and application instructions.
B. Samples: For each type of paint system and in each color and gloss of topcoat.
1.3 MAINTENANCE MATERIAL SUBMITTALS
A. Furnish extra materials, from the same product run, that match products installed and that are packaged with protective covering for storage and identified with labels describing contents.
1. Paint: 5 percent, but not less than 3.8 L (1 gal.) of each material and color applied.

PART 2 - PRODUCTS
2.1 MANUFACTURERS
A. Manufacturers: Subject to compliance with requirements, provide products by one of the following:
1. PPG Industries
2. Benjamin Moore & Co.
3. Diamond Vogel Paints.
4. ICI Paints.
5. Kwal Paint.
6. Sherwin-Williams Company (The).
2.2 PAINT, GENERAL
A. Material Compatibility:
1. Provide materials for use within each paint system that are compatible with one another and substrates indicated, under conditions of service and application as demonstrated by manufacturer, based on testing and field experience.
2. For each coat in a paint system, provide products recommended in writing by manufacturers of topcoat for use in paint system and on substrate indicated.
B. Colors: As indicated on material schedule, A-301.
2.3 PRIMERS/SEALERS
A. Primer Sealer, Latex, Interior: MPI #50.
1. See Painting Schedule at the end of this Section.
2.4 FLOOR COATINGS
A. Sealer, Water Based, for Sealed Concrete Floors: MPI #99.
1. See Painting Schedule at the end of this Section.

PART 3 - EXECUTION
3.1 EXAMINATION
A. Examine substrates and conditions, with Applicator present, for compliance with requirements for maximum moisture content and other conditions affecting performance of the Work.
B. Maximum Moisture Content of Substrates: When measured with an electronic moisture meter as follows:
1. Concrete: 12 percent.
2. Masonry (Clay and CMU): 12 percent.
3. Wood: 15 percent.
4. Gypsum Board: 12 percent.
C. Verify suitability of substrates, including surface conditions and compatibility with existing finishes and primers.
D. Proceed with coating application only after unsatisfactory conditions have been corrected.
1. Application of coating indicates acceptance of surfaces and conditions.
3.2 PREPARATION
A. Comply with manufacturer's written instructions and recommendations in "MPI Manual" applicable to substrates indicated.
B. Remove hardware, covers, plates, and similar items already in place that are removable and are not to be painted. If removal is impractical or impossible because of size or weight of item, provide surface-applied protection before surface preparation and painting.
1. After completing painting operations, use workers skilled in the trades involved to reinstall items that were removed. Remove surface-applied protection if any.
C. Clean substrates of substances that could impair bond of paints, including dust, dirt, oil, grease, and incompatible paints and encapsulants.
1. Remove incompatible primers and reprime substrate with compatible primers or apply tie coat as required to produce paint systems indicated.
3.3 APPLICATION
A. Apply paints according to manufacturer's written instructions and to recommendations in "MPI Manual."
B. Apply paints to produce surface films without cloudiness, spotting, holidays, laps, brush marks, roller tracking, runs, sags, ropiness, or other surface imperfections. Cut in sharp lines and color breaks.
3.4 CLEANING AND PROTECTION
A. Protect work of other trades against damage from paint application. Correct damage to work of other trades by cleaning, repairing, replacing, and refinishing, as approved by Architect, and leave in an undamaged condition.
B. At completion of construction activities of other trades, touch up and restore damaged or defaced painted surfaces.

SECTION 099123 - INTERIOR PAINTING CONT'D

3.5 INTERIOR PAINTING SCHEDULE
A. Gypsum Board Substrates:
1. Institutional Low-Odor/VOC Latex System:
a. Prime Coat: Primer sealer, interior, institutional low odor/VOC, MPI #149.
b. Intermediate Coat: Latex, interior, institutional low odor/VOC, matching topcoat.
c. Topcoat: Latex, interior, institutional low odor/VOC, MPI #144, for ceilings
d. Topcoat: Latex, interior, institutional low odor/VOC, MPI #146, all surfaces other than ceilings

END OF SECTION

SECTION 104416 - FIRE EXTINGUISHERS

PART 1 - GENERAL
1.1 SUMMARY
A. Section includes portable, hand-carried fire extinguishers.
1.2 ACTION SUBMITTALS
A. Product Data: For each type of product indicated product.
1.3 WARRANTY
A. Special Warranty: Manufacturer's standard form in which manufacturer agrees to repair or replace fire extinguishers that fail in materials or workmanship within specified warranty period.
1. Warranty Period: Six years from date of Substantial Completion.

PART 2 - PRODUCTS
2.1 PERFORMANCE REQUIREMENTS
A. NFPA Compliance: Fabricate and label fire extinguishers to comply with NFPA 10, "Portable Fire Extinguishers."
2.2 PORTABLE, HAND-CARRIED FIRE EXTINGUISHERS
A. Fire Extinguishers: Type, size, and capacity for each fire-protection cabinet ~~and~~ mounting bracket indicated.
1. Manufacturers: Subject to compliance with requirements, available manufacturers offering products that may be incorporated into the Work include, but are not limited to, the following:
a. Guardian Fire Equipment, Inc.
b. JL Industries, Inc.; a division of the Activar Construction Products Group.
c. Kidde Residential and Commercial Division; Subsidiary of Kidde plc.
d. Larsens Manufacturing Company.
B. Multipurpose Dry-Chemical Type: UL-rated 2A/10BC nominal capacity, with monoammonium phosphate-based dry chemical in manufacturer's standard enameled container.
2.3 MOUNTING BRACKETS
A. Mounting Brackets: Manufacturer's standard galvanized steel, designed to secure fire extinguisher to wall or structure, of sizes required for types and capacities of fire extinguishers indicated, with plated or red baked-enamel finish.
1. Manufacturers: Same as fire extinguisher.
B. Identification: Lettering complying with authorities having jurisdiction for letter style, size, spacing, and location. Locate as indicated by Architect.
1. Identify bracket-mounted fire extinguishers with the words "FIRE EXTINGUISHER" in red letter decals applied to mounting surface.
a. Orientation: Horizontal.

PART 3 - EXECUTION
3.1 INSTALLATION
A. Examine fire extinguishers for proper charging and tagging.
1. Remove and replace damaged, defective, or undercharged fire extinguishers.
B. Install fire extinguishers and mounting brackets in locations indicated and in compliance with requirements of authorities having jurisdiction.
1. Mounting Brackets: 60 inches above finished floor to top of fire extinguisher.
C. Mounting Brackets: Fasten mounting brackets to surfaces, square and plumb, at locations indicated.

END OF SECTION

SECTION 107113.43 - FIXED SUN SCREENS

PART 1 GENERAL
1.1 SECTION INCLUDES
A. Modular, shop fabricated, extruded aluminum sun screens to be mounted on structure provided by others.
1.2 SUBMITTALS
A. See Section 01-30-00 - ADMINISTRATIVE REQUIREMENTS, for submittal procedures.
B. Shop Drawings: Prior to commencement of fabrication, submit detailed shop drawings, showing all profiles, sections of all components, finishes, fastening details, and manufacturer's technical and descriptive data. Include field dimensions of openings and elevations on shop drawings.
C. Design Data: Submit comprehensive structural analysis of design for the specified loads. Stamp and sign calculations by professional engineer.
1.3 QUALITY ASSURANCE
A. Designer Qualifications: Perform structural design under direct supervision of a Professional Engineer experienced in design of this type of work licensed in State Name.
B. Manufacturer Qualifications: Company specializing in manufacturing products specified in this section, with no less than five years of documented experience.
C. Installer Qualifications: Company specializing in performing the work of this section.
1.4 DELIVERY, STORAGE, AND HANDLING
A. Deliver materials to project site ready for erection.
B. Package using methods that prevent damage during shipping and storage on site.
C. Store materials under cover and elevated above grade.
1.5 WARRANTY
A. See Section 01-78-00 - CLOSEOUT SUBMITTALS, for additional warranty requirements.
B. Sun Screens: Correct defective work within a one year period after Date of Substantial Completion.

PART 2 PRODUCTS
2.1 MANUFACTURERS
A. Fixed Aluminum Sun Screens:
1. Arcadia, Inc.
2. Architectural Grilles & Sunshades, Inc.
3. Mapes Industries Inc..
2.2 SUN SCREENS
A. Aluminum Sun Screens: Shop fabricated, shop finished, extruded aluminum outriggers, louvers, and fascia, free of defects impairing strength, durability or appearance.
1. Configuration: As indicated on drawings.
2. Horizontal Shape: Solid flat panel with integral gutter system.
3. Outrigger Shape: Straight.
4. Design Criteria: Design and fabricate to resist the following loads without failure, damage, or permanent deflection:
a. As indicated on drawings.
b. Thermal Movement: Plus/minus 1/8 inch, maximum.
5. Sizes: As indicated on drawings.
6. Exposed Aluminum Finish: Match Aluminum-Framed Storefront framing, refer to section for finish information.
7. Provide a complete system ready for erection at project site.
2.3 MATERIALS
A. Aluminum Extrusions: ASTM B209 (ASTM B209M) or ASTM B221 (ASTM B221M).
B. Concealed Structural Supports: Aluminum, or steel coated for corrosion resistance and dissimilar metal isolation.
C. Fasteners: ASTM F593 stainless steel or ASTM A307 carbon steel.

PART 3 EXECUTION
3.1 EXAMINATION
A. Examine substrates and site area for conditions that might prevent satisfactory installation.
B. Verify that dimensions of supporting structure are within plus/minus 1/8 inch of dimensions indicated on shop drawings.
C. Verify that all adjacent painting, roofing, masonry work, and other work that might damage sun screen finish has been completed prior to installation of sun screens.
D. Do not install until after all adjacent painting, roofing and masonry have been completed.
E. Do not proceed with installation until all conditions are satisfactory.
3.2 INSTALLATION
A. Install in accordance with manufacturer's installation instructions.
B. Set units level, plumb, with uniform joints, and aligned with building elements.
C. Separate dissimilar metals using concealed bituminous paint or non-absorbent gasket.
D. Anchor units to structure as indicated on drawings.
E. Do not cut or trim aluminum members without approval of manufacturer; do not install damaged members.
3.3 TOLERANCES
A. Maximum Variation from Level: Plus/Minus 1/8 inch.
3.4 CLEANING
A. Clean exterior surfaces units of dust and debris; follow manufacturer's cleaning instructions for the finish used.
3.5 PROTECTION
A. Protect units after installation to prevent damage due to other work until Date of Substantial Completion.

END OF SECTION

DESIGNED: NJB
DRAWN: NJB
CHECKED: DJK
ISSUE DATE: 10/18/2024
REVISIONS:
No.: DATE: BY: DESCRIPTION:

REGISTERED ARCHITECT
DANIEL J. KERNS
A-4463
10/17/24
STATE OF NEBRASKA

SCHEMMER
Design with Purpose. Build with Confidence.
1044 North 115th Street, Suite 300, Omaha, Nebraska 68154 | 402.493.4800
CA0666

LANOHA DEVELOPMENT
HAWTHORNE COURT MULTI-TENANT BUILDING
17662 WELCH PLAZA
OMAHA, NE 68154
ARCHITECTURAL SPECS

PROJECT NO.: 010347.001

A 03

10/17/2024 10:16:14 AM

REF. NOTES (x):

1	STRUCTURAL STOOP, SEE STRUCTURAL.	5	GAS METER MANIFOLD. SEE MECHANICAL.
2	STRUCTURAL COLUMN, SEE STRUCTURAL.	6	CONCRETE FILLED, STL PIPE BOLLARD, TYP. SEE DETAIL 2/A101
3	30X36 ROOF HATCH. SEE DETAIL 5/A103.	8	FLOOR DRAIN. SEE PLUMBING.
4	NO CONCRETE IN THIS AREA.	9	ELEC EQUIPMENT. SEE ELECTRICAL.

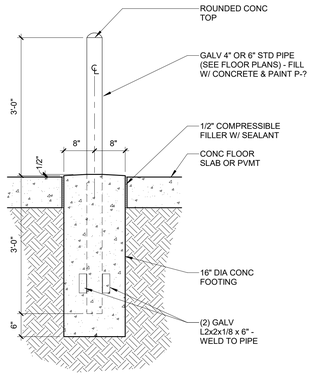

1 PIPE BOLLARD DETAIL
SCALE: 3/4" = 1'-0"

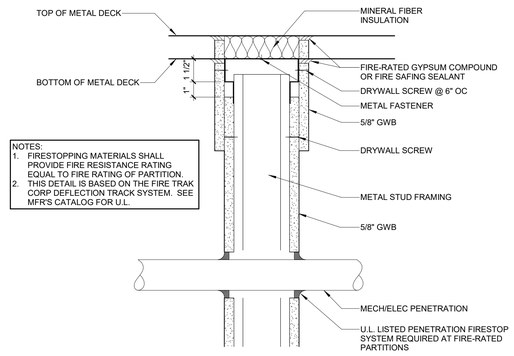

NOTES:
1. FIRESTOPPING MATERIALS SHALL PROVIDE FIRE RESISTANCE RATING EQUAL TO FIRE RATING OF PARTITION.
2. THIS DETAIL IS BASED ON THE FIRE TRAK CORP DEFLECTION TRACK SYSTEM. SEE MFR'S CATALOG FOR U.L.

2 DEFLECTION TRACK PERPENDICULAR TO DECK
SCALE: 3" = 1'-0"

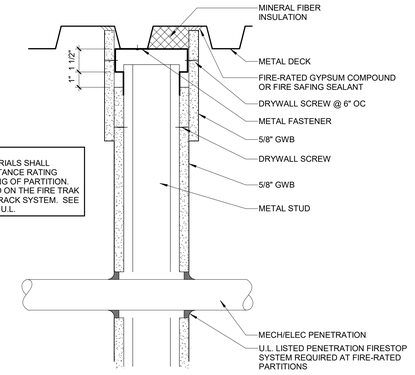

NOTES:
1. FIRESTOPPING MATERIALS SHALL PROVIDE FIRE RESISTANCE RATING EQUAL TO FIRE RATING OF PARTITION.
2. THIS DETAIL IS BASED ON THE FIRE TRAK CORP DEFLECTION TRACK SYSTEM. SEE MFR'S CATALOG FOR U.L.

3 DEFLECTION TRACK PARALLEL TO DECK
SCALE: 3" = 1'-0"

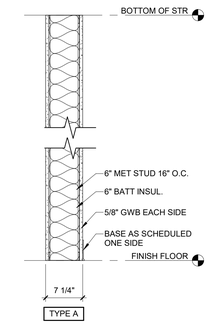

4 WALL TYPES
SCALE: 1" = 1'-0"

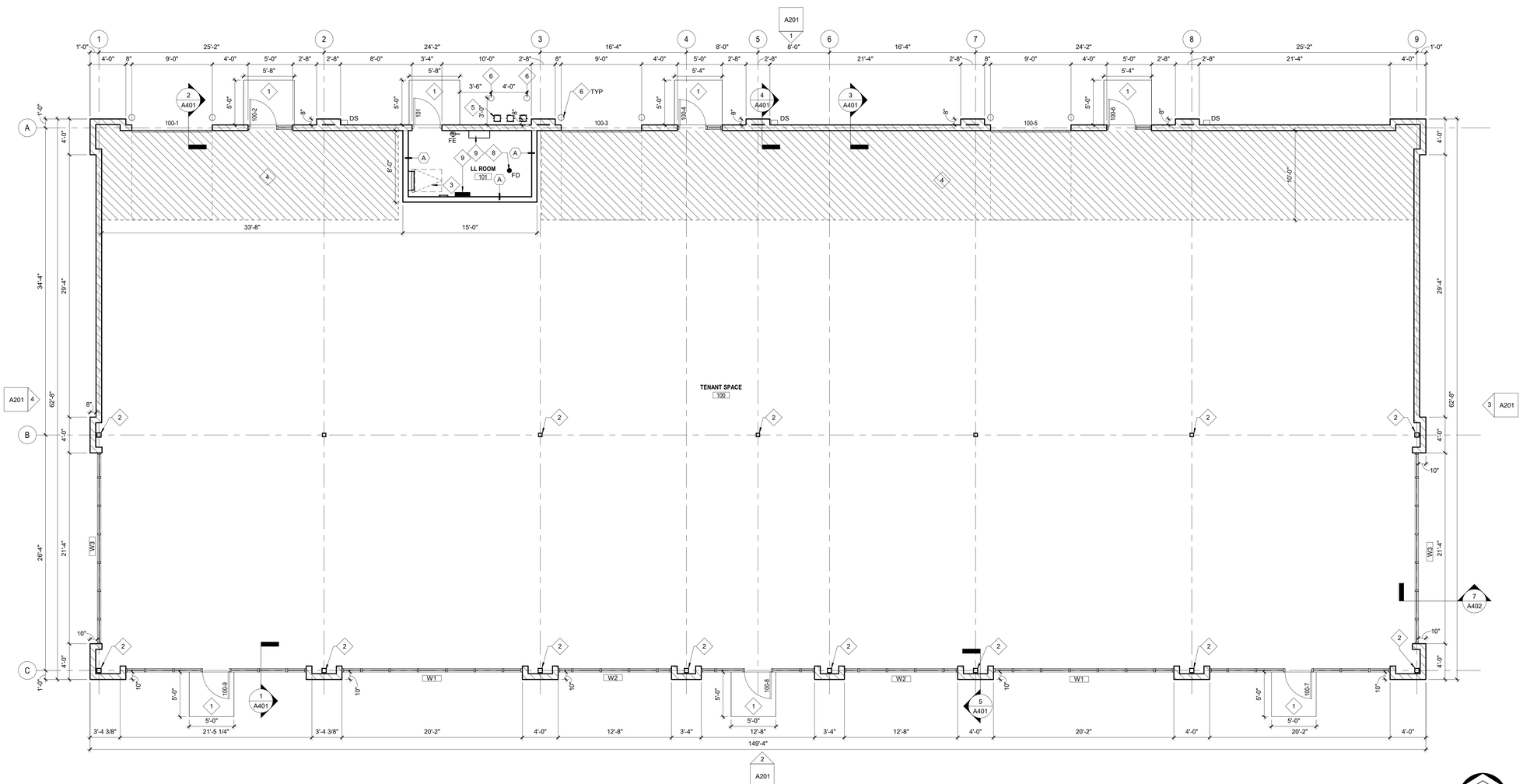

5 FLOOR PLAN
SCALE: 3/16" = 1'-0"

DESIGNED:	NJB
DRAWN:	NJB
CHECKED:	DJK

ISSUE DATE: 10/18/2024
REVISIONS:

No.:	DATE:	BY:	DESCRIPTION:

ARCHITECT DANIEL J. KERNS A-4463 10/18/24 STATE OF NEBRASKA

SCHEMMER
Design with Purpose. Build with Confidence.
1044 North 115th Street, Suite 300, Omaha, Nebraska 68154 | 402.493.4800
CA0666

LANOHA DEVELOPMENT
HAWTHORNE COURT MULTI-TENANT BUILDING
17662 WELCH PLAZA
OMAHA, NE 68154
FLOOR PLAN

PROJECT NO.: 010347.001

A101

C:\Users\nbosch\Documents\Revit_temp\010347001-ARCH_R23_nbosch.rvt
10/17/2024 2:08:22 PM

010347001-2-A101 FLOOR PLAN

REF. NOTES (X):

3	30X36 ROOF HATCH. SEE DETAIL 5/A103.
7	MAPES ALUMINUM CANOPY. SEE SPECS.

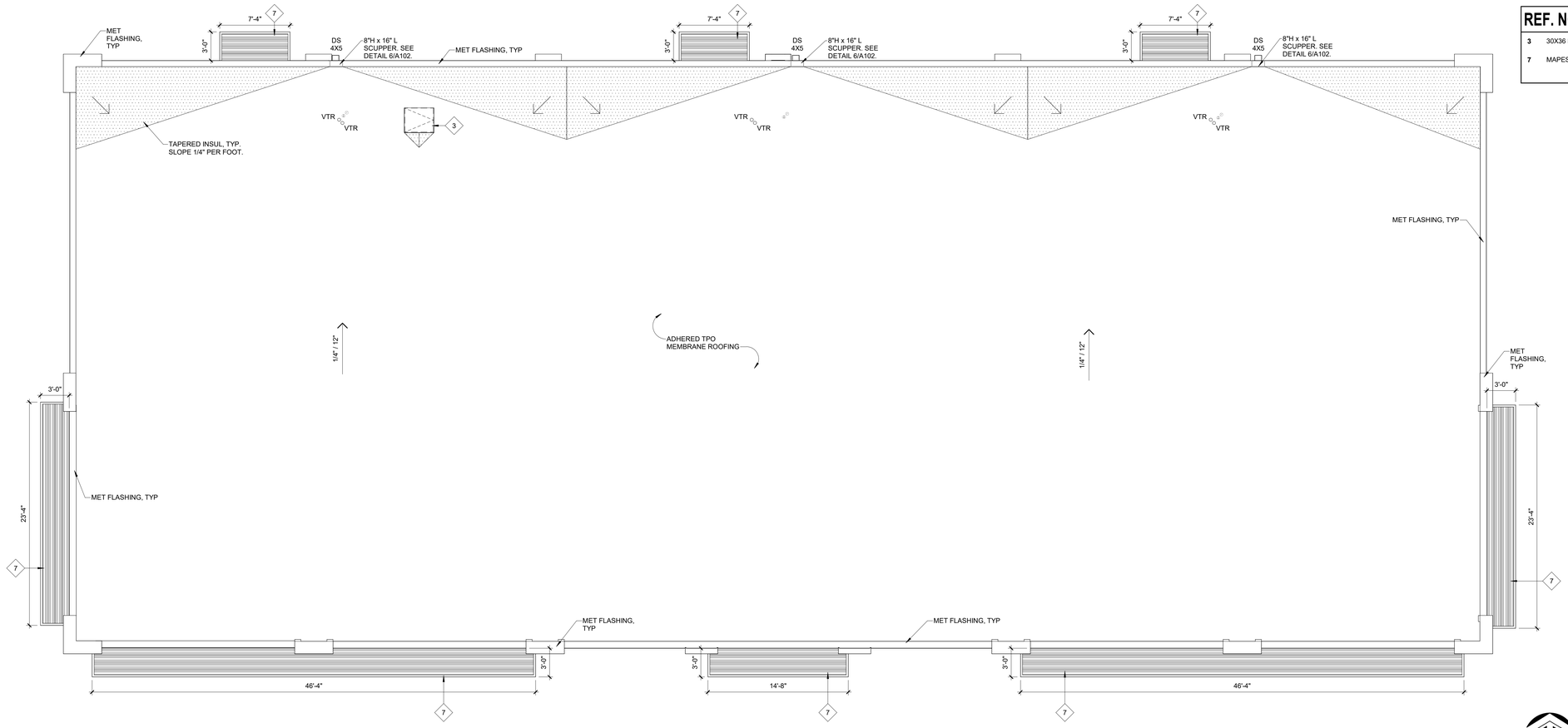

1 ROOF PLAN
SCALE: 3/16" = 1'-0"

NORTH

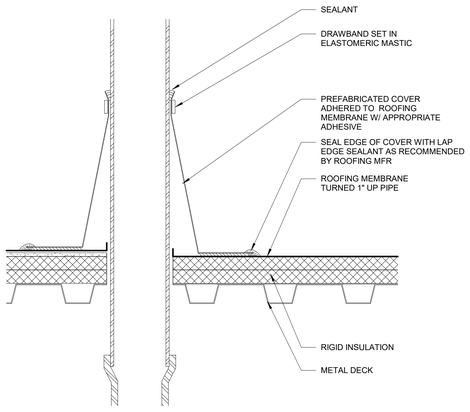

2 TYP PIPE FLASHING DETAIL W/ PREFABRICATED COVER
SCALE: 1 1/2" = 1'-0"

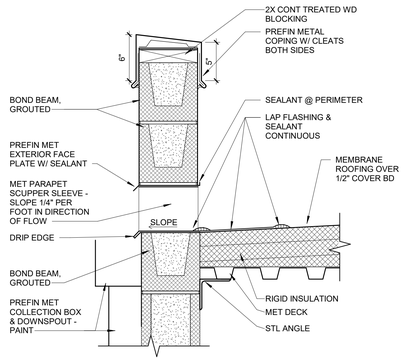

4 SCUPPER DETAIL
SCALE: 1 1/2" = 1'-0"

DESIGNED: NJB
DRAWN: NJB
CHECKED: DJK

ISSUE DATE: 10/18/2024
REVISIONS:

No.:	DATE:	BY:	DESCRIPTION:

ARCHITECT
DANIEL J. KERNS
A-4463
10/17/24
STATE OF NEBRASKA

SCHEMMER
Design with Purpose. Build with Confidence.
1044 North 115th Street, Suite 300, Omaha, Nebraska 68154 | 402.493.4800
CA0666

LANOHA DEVELOPMENT
HAWTHORNE COURT MULTI-TENANT BUILDING
17662 WELCH PLAZA
OMAHA, NE 68154
ROOF PLAN & DETAILS

PROJECT NO.: 010347.001

A102

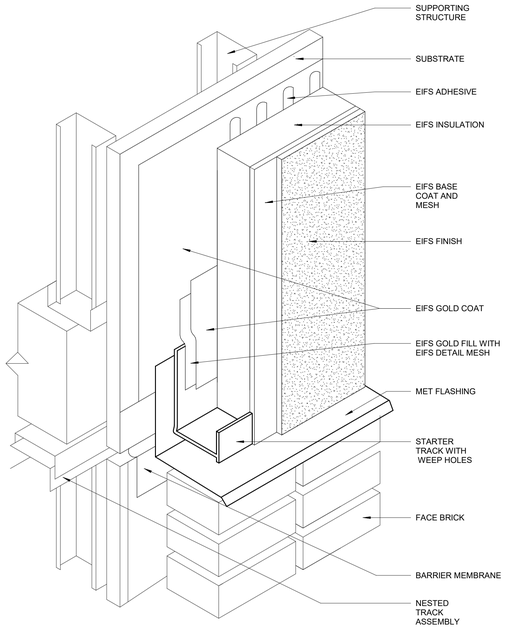

1 TYP EIFS DETAIL @ BRICK TRANSITION
SCALE: 3" = 1'-0"

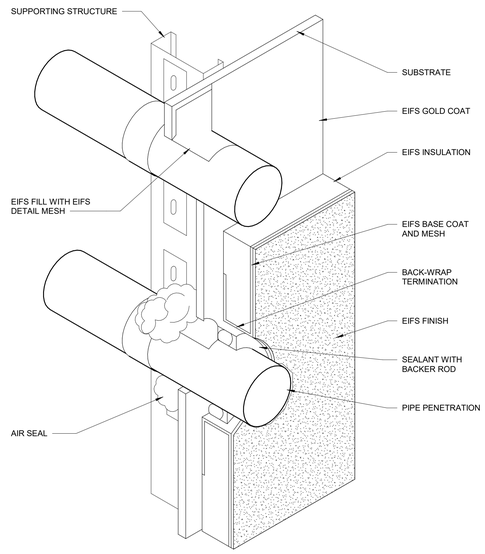

2 DET-TYP DETAIL AT EIFS PENETRATION
SCALE: 3" = 1'-0"

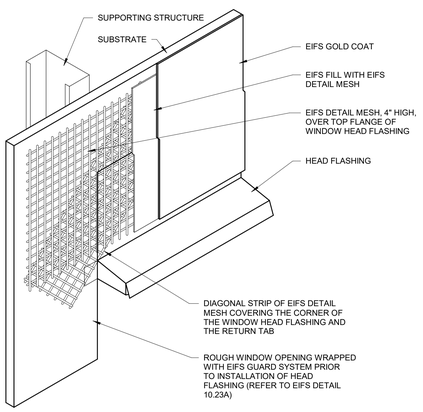

4 TYP EIFS HEAD FLASHING INSTALLATION
SCALE: 3" = 1'-0"

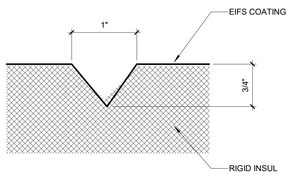

3 TYP REVEAL DETAIL
SCALE: 12" = 1'-0"

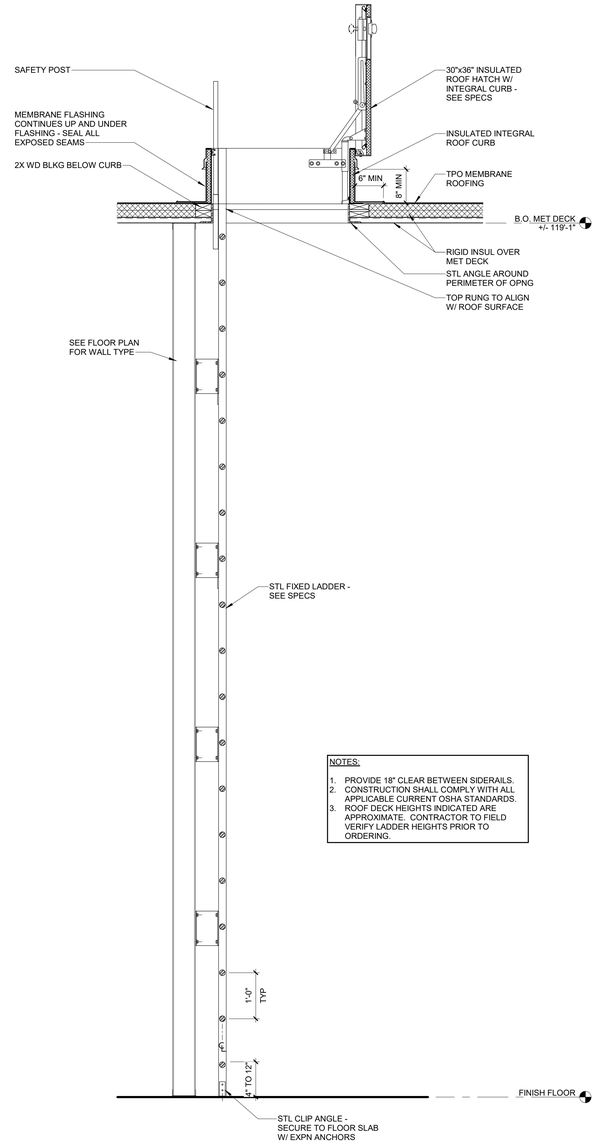

NOTES:

1. PROVIDE 18" CLEAR BETWEEN SIDERAILS.
2. CONSTRUCTION SHALL COMPLY WITH ALL APPLICABLE CURRENT OSHA STANDARDS.
3. ROOF DECK HEIGHTS INDICATED ARE APPROXIMATE. CONTRACTOR TO FIELD VERIFY LADDER HEIGHTS PRIOR TO ORDERING.

5 ROOF HATCH & LADDER DETAIL
SCALE: 3/4" = 1'-0"

DESIGNED: NJB
DRAWN: NJB
CHECKED: DJK

ISSUE DATE: 10/18/2024
REVISIONS:

No.:	DATE:	BY:	DESCRIPTION:

ARCHITECT DANIEL J. KERNS A-4463 10/17/24 STATE OF NEBRASKA

SCHEMMER
Design with Purpose. Build with Confidence.
1044 North 115th Street, Suite 300, Omaha, Nebraska 68154 | 402.493.4800
CA0666

LANOHA DEVELOPMENT
HAWTHORNE COURT MULTI-TENANT BUILDING
17662 WELCH PLAZA
OMAHA, NE 68154
DETAILS

PROJECT NO.: 010347.001

A103

C:\Users\nbeseth\Documents\Revit_temp\010347001-ARCH_R23_nbeseth.rvt
10/17/2024 10:15:16 AM

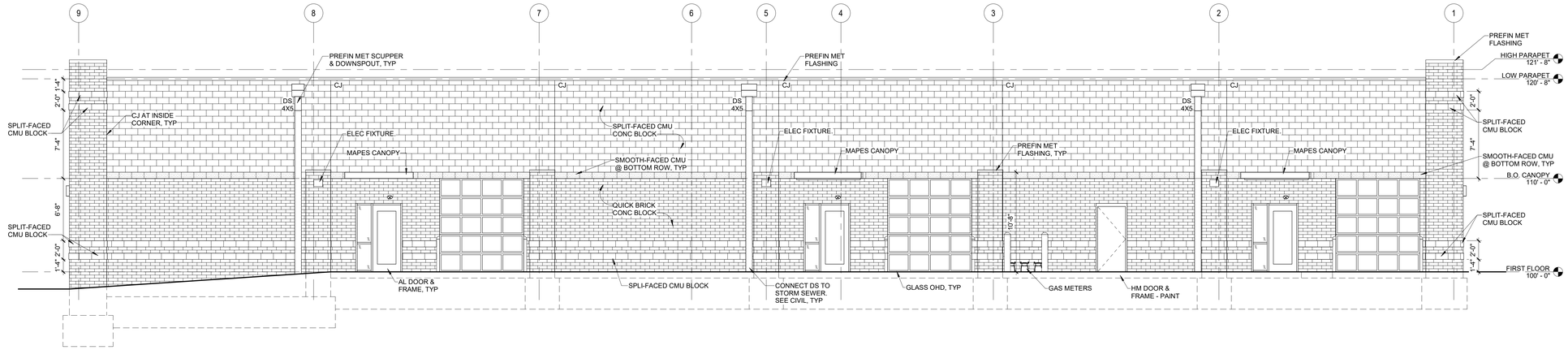

1 NORTH ELEVATION
SCALE: 3/16" = 1'-0"

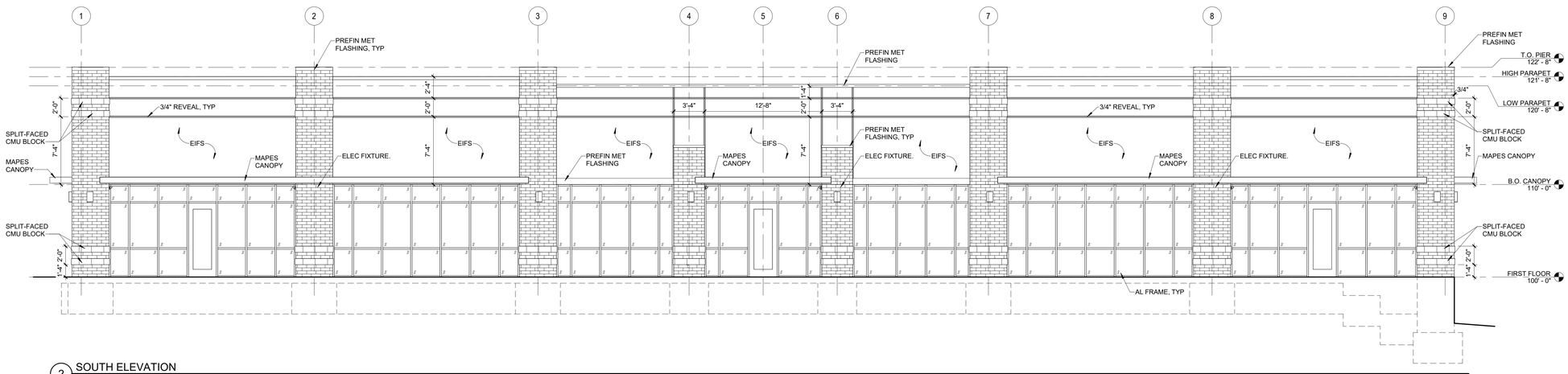

2 SOUTH ELEVATION
SCALE: 3/16" = 1'-0"

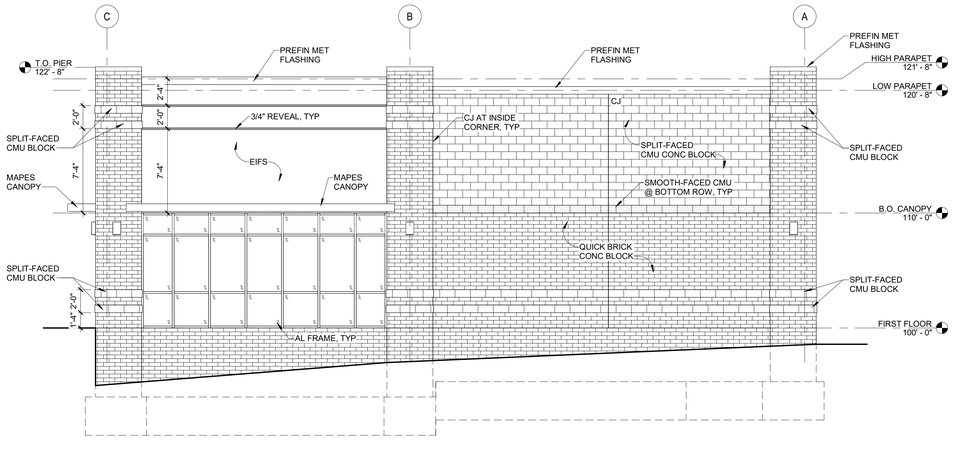

3 EAST ELEVATION
SCALE: 3/16" = 1'-0"

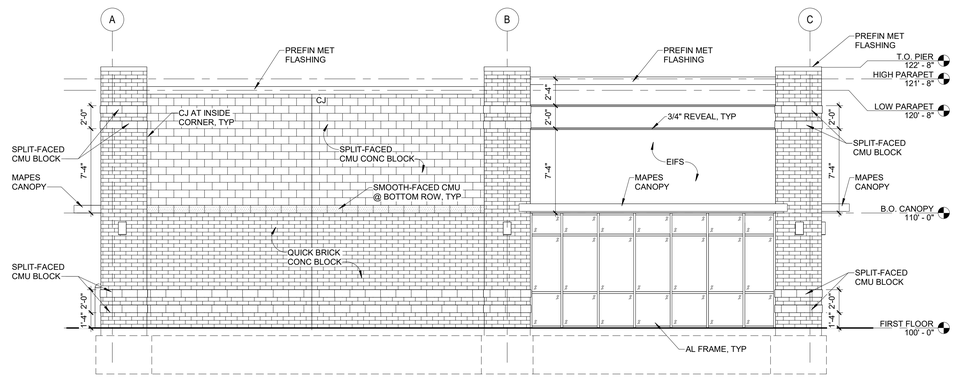

4 WEST ELEVATION
SCALE: 3/16" = 1'-0"

DESIGNED:	NJB
DRAWN:	NJB
CHECKED:	DJK

ISSUE DATE: 10/18/2024
REVISIONS:

No.:	DATE:	BY:	DESCRIPTION:

ARCHITECT DANIEL J. KERNS A-4463 10/18/24 STATE OF NEBRASKA

SCHEMMER
Design with Purpose. Build with Confidence.
1044 North 115th Street, Suite 300, Omaha, Nebraska 68154 | 402.493.4800
CA0666

LANOHA DEVELOPMENT
HAWTHORNE COURT MULTI-TENANT BUILDING
17662 WELCH PLAZA
OMAHA, NE 68154
EXTERIOR BUILDING ELEVATIONS

PROJECT NO.: 010347.001

A201

DOOR SCHEDULE

DOOR NO	DOOR SIZE WIDTH	DOOR SIZE HEIGHT	DOOR TYPE	DOOR MATL	DOOR GLASS	FRAME TYPE	FRAME MATL	DETAIL HEAD	DETAIL JAMB	DETAIL JAMB	DETAIL SILL	SET NO	LABEL	REMARKS
100-1	9' - 0"	10' - 0"	AL : OH	AL	G-1	--	--	5A/A402	5B/A402	5B/A402	6C/A402	3		ALUM/GLASS, MANUAL, HIGH LIFT OHD
100-2	3' - 0"	7' - 2"	AL : FG	AL	G-1	AL:F4	AL	9A/A301	9B/A301	9C/A301	8E/A301	1		
100-3	9' - 0"	10' - 0"	AL : OH	AL	G-1	--	--	5A/A402	5B/A402	5B/A402	6C/A402	3		ALUM/GLASS, MANUAL, HIGH LIFT OHD
100-4	3' - 0"	7' - 2"	AL : FG	AL	G-1	AL:F4	AL	9A/A301	9B/A301	9C/A301	8E/A301	1		
100-5	9' - 0"	10' - 0"	AL : OH	AL	G-1	--	--	5A/A402	5B/A402	5B/A402	6C/A402	3		ALUM/GLASS, MANUAL, HIGH LIFT OHD
100-6	3' - 0"	7' - 2"	AL : FG	AL	G-1	AL:F4	AL	9A/A301	9B/A301	9C/A301	8E/A301	1		
100-7	3' - 0"	8' - 0"	AL : FG	AL	G-1	AL:F2	AL	8A/A301	8C/A301	8C/A301	8E/A301	1		
100-8	3' - 0"	8' - 0"	AL : FG	AL	G-1	AL:F3	AL	8A/A301	8C/A301	8C/A301	8E/A301	1		
100-9	3' - 0"	8' - 0"	AL : FG	AL	G-1	AL:F2	AL	8A/A301	8C/A301	8C/A301	8E/A301	1		
101	3' - 0"	7' - 0"	HM : F	AL	G-1	HM:F1	HM	10A/A301	10B/A301	10B/A301	6B/A402	2		

GLASS TYPES

G-1 1" INSULATED, TINTED LOW-E-GLASS TEMPERED
G-2 1" INSULATED, TINTED LOW-E-GLASS

ROOM SCHEDULE

ROOM NO	ROOM NAME	FLOOR MATL	FLOOR FINISH	BASE MATL	CEILING HEIGHT	CEILING MATL	CEILING FINISH	NORTH WALL MATL	NORTH WALL FINISH	EAST WALL MATL	EAST WALL FINISH	SOUTH WALL MATL	SOUTH WALL FINISH	WEST WALL MATL	WEST WALL FINISH	REMARKS
100	TENANT SPACE	CONC	--	--	VARIES	EXP STR	--	CMU	--	CMU	--	CMU/GWB	--	CMU	--	GWB SHALL BE TAPED, SANDED & READY TO ACCEPT PAINT
101	LL ROOM	CONC	--	--	VARIES	EXP STR	--	CMU		GWB	PAINT	GWB	PAINT	GWB	PAINT	

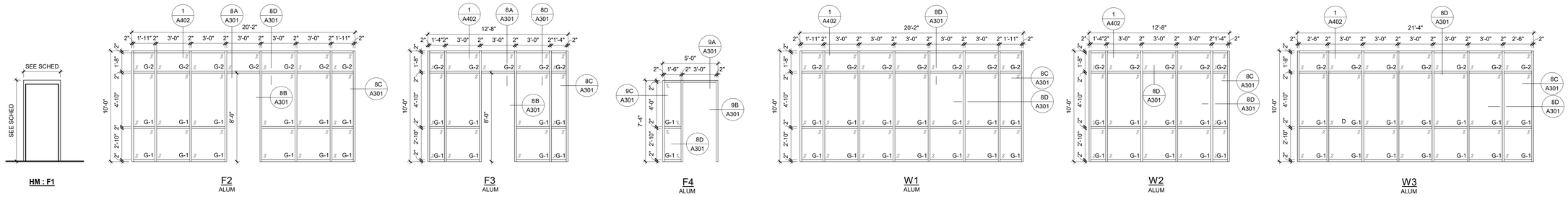

DOOR FRAME TYPES
SCALE: 1/4" = 1'-0"

WINDOW TYPES
SCALE: 1/4" = 1'-0"

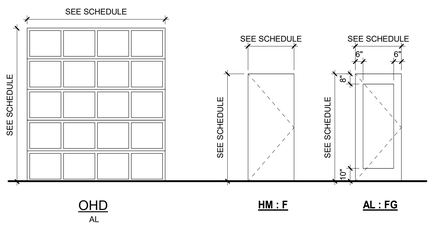

DOOR PANEL TYPES
SCALE: 1/4" = 1'-0"

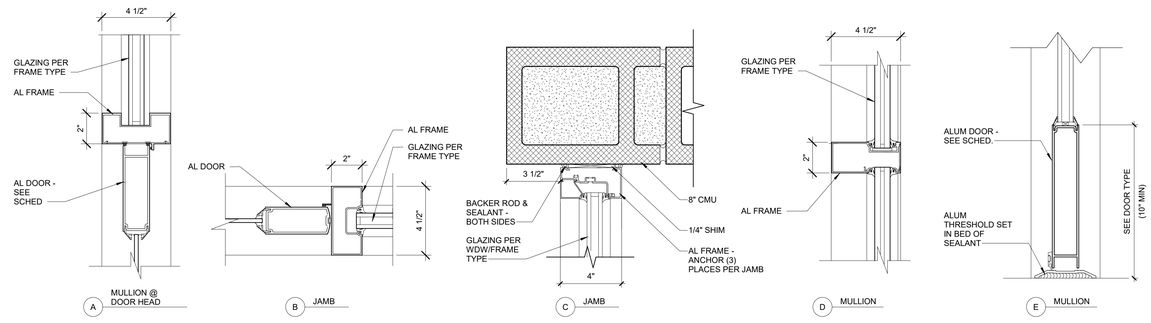

8 AL WDW DETAILS
SCALE: 3" = 1'-0"

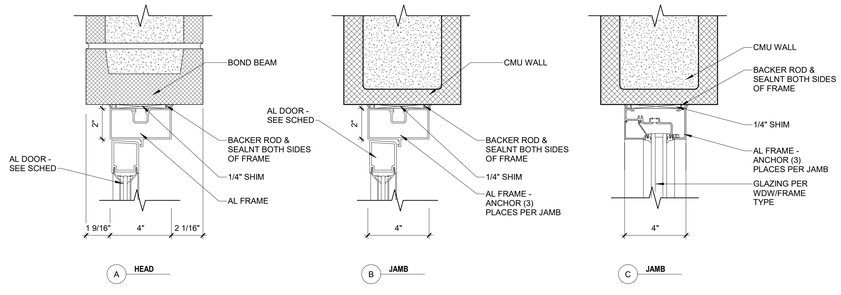

9 AL DOOR DETAIL
SCALE: 3" = 1'-0"

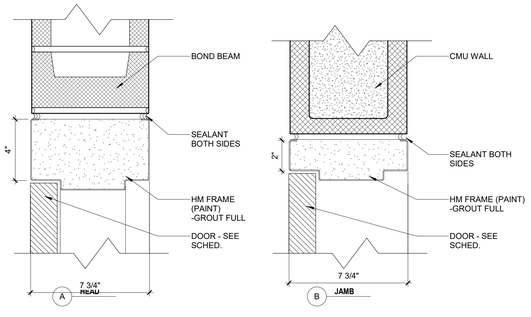

10 HM DOOR DETAIL
SCALE: 3" = 1'-0"

DESIGNED: NJB
DRAWN: NJB
CHECKED: DJK

ISSUE DATE: 10/18/2024
REVISIONS:

No.:	DATE:	BY:	DESCRIPTION:

ARCHITECT DANIEL J. KERNS A-4463 10/18/24 STATE OF NEBRASKA

SCHEMMER
Design with Purpose. Build with Confidence.
1044 North 115th Street, Suite 300, Omaha, Nebraska 68154 | 402.493.4800
CA0666

LANOHA DEVELOPMENT
HAWTHORNE COURT MULTI-TENANT BUILDING
17662 WELCH PLAZA
OMAHA, NE 68154

SCHEDULES, DOOR AND WINDOW DETAILS, WALL TYPES

PROJECT NO.: 010347.001

A301

C:\Users\nbosch\Documents\Revit_temp\010347001-ARCH_R23_dboesch.rvt
10/17/2024 2:32:49 PM

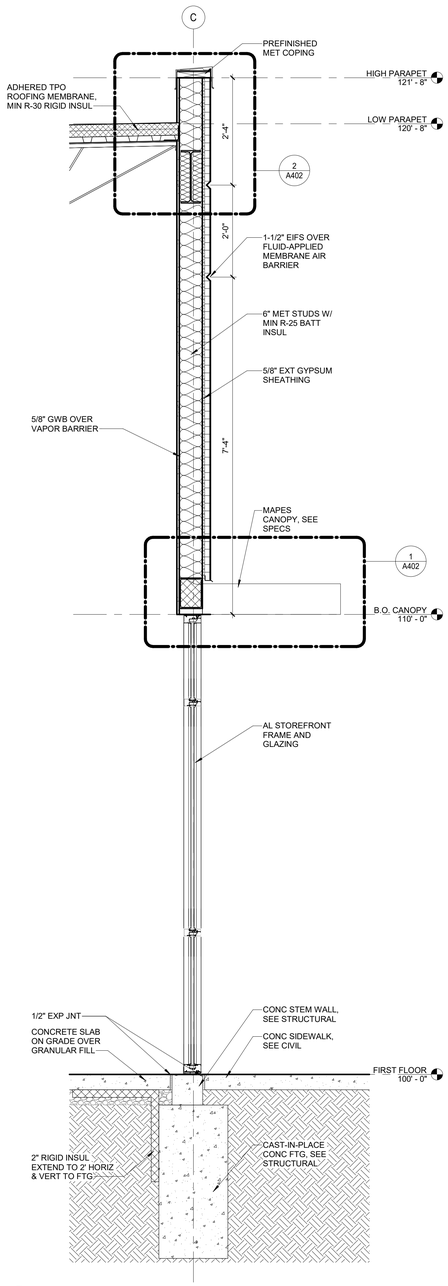

1 WALL SECTION
SCALE: 3/4" = 1'-0"

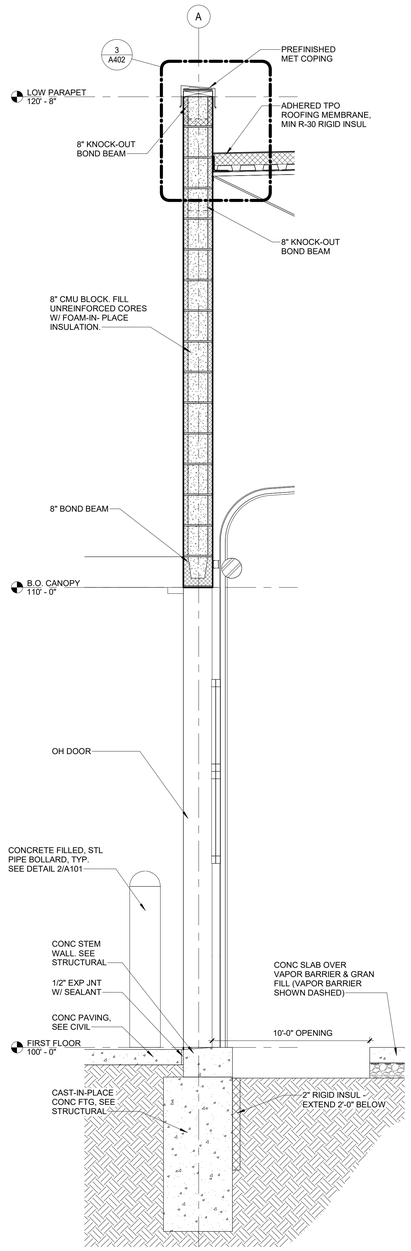

2 ALL SECTIONW
SCALE: 3/4" = 1'-0"

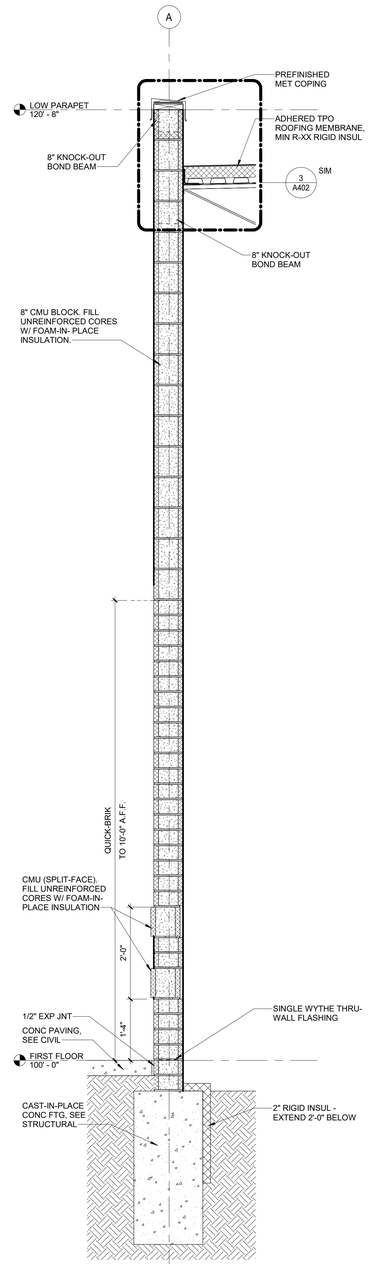

3 WALL SECTION
SCALE: 3/4" = 1'-0"

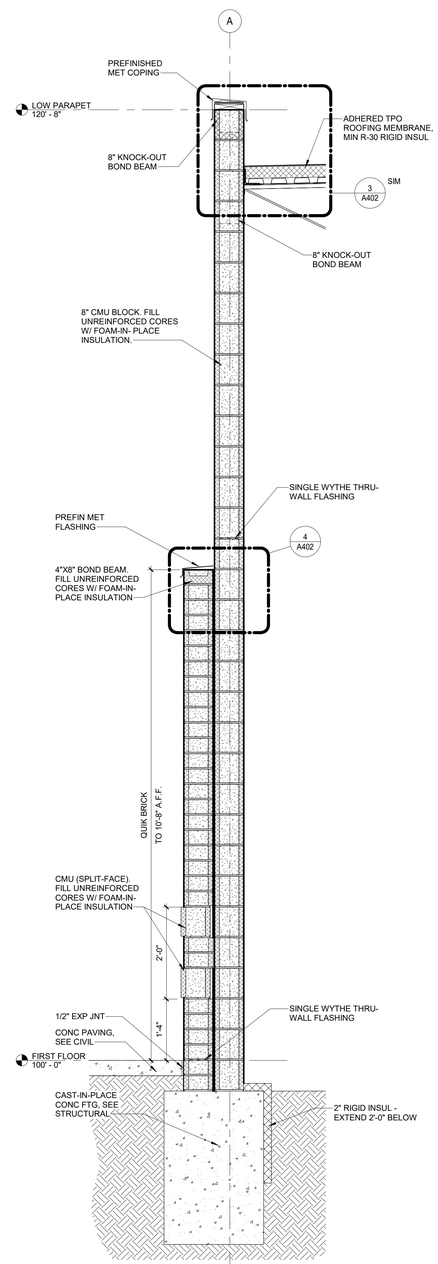

4 WALL SECTION
SCALE: 3/4" = 1'-0"

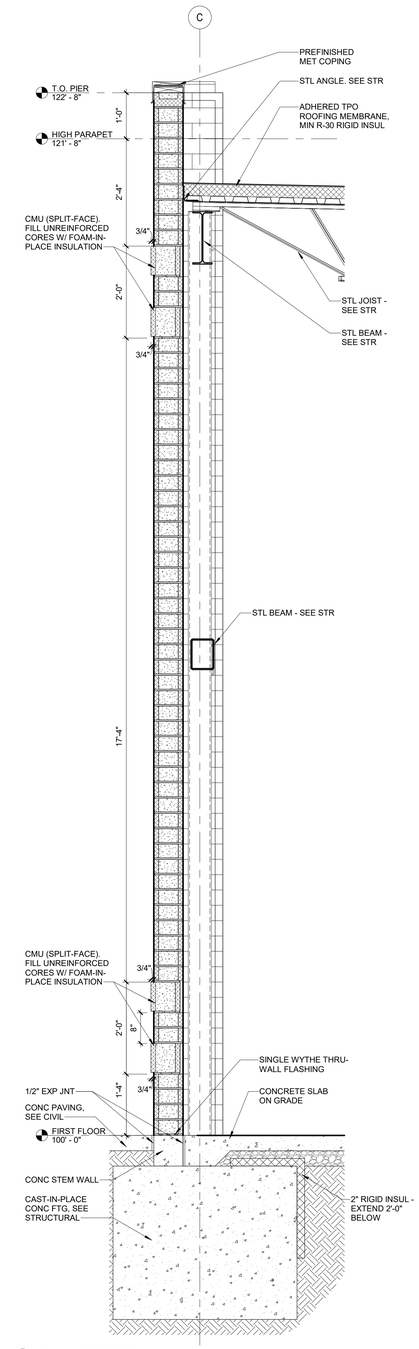

5 WALL SECTION
SCALE: 3/4" = 1'-0"

DESIGNED:	NJB	ISSUE DATE:	10/18/2024
DRAWN:	NJB	REVISIONS:	
CHECKED:	DJK	No.: DATE: BY: DESCRIPTION:	

ARCHITECT DANIEL J. KERNS A-4463 10/17/24 STATE OF NEBRASKA

SCHEMMER
Design with Purpose. Build with Confidence.
1044 North 115th Street, Suite 300, Omaha, Nebraska 68154 | 402.493.4800
CA0666

LANOHA DEVELOPMENT
HAWTHORNE COURT MULTI-TENANT BUILDING
17662 WELCH PLAZA
OMAHA, NE 68154
WALL SECTIONS

PROJECT NO.: 010347.001

A401

C:\Users\nbosch\Documents\Revit_temp\010347001-ARCH_R23_dbosch.rvt
10/17/2024 2:09:33 PM

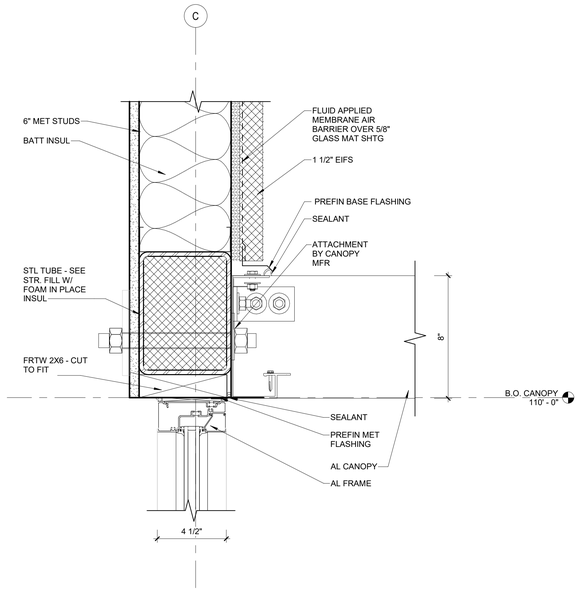

1 CANOPY DETAIL
SCALE: 3" = 1'-0"

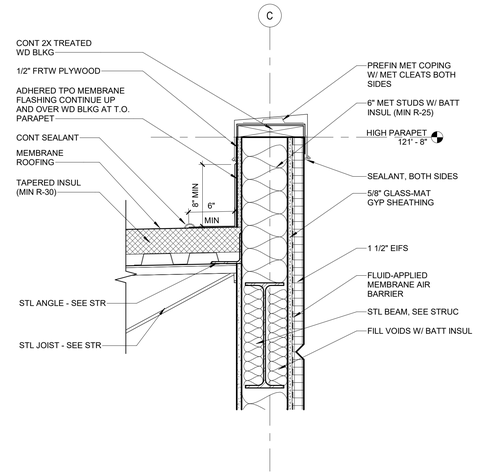

2 PARAPET DETAIL
SCALE: 1 1/2" = 1'-0"

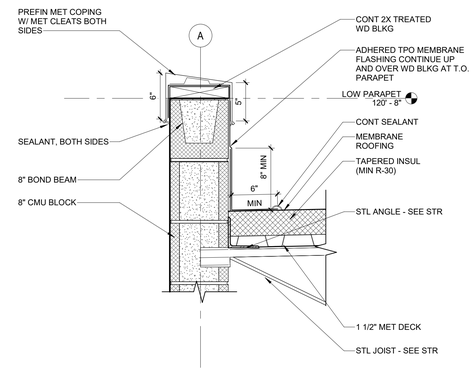

3 PARAPET DETAIL
SCALE: 1 1/2" = 1'-0"

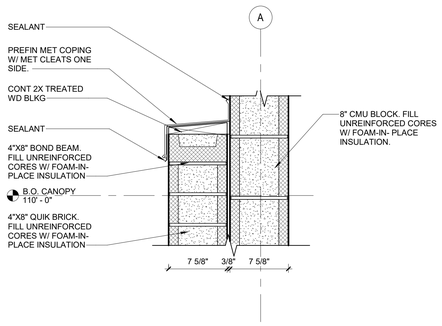

4 COLUMN DETAIL
SCALE: 1 1/2" = 1'-0"

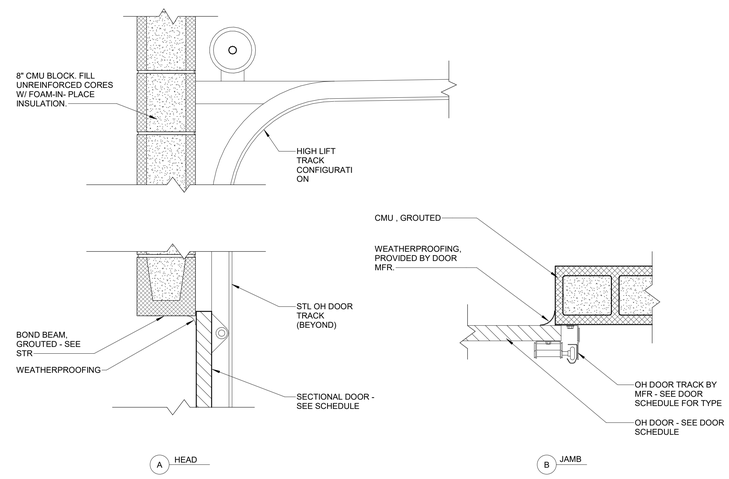

5 OH DOOR DETAIL
SCALE: 1 1/2" = 1'-0"

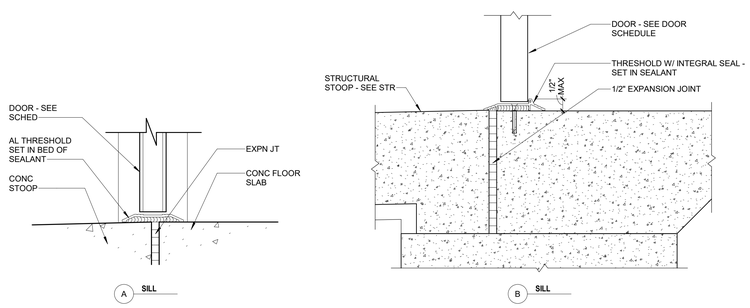

6 SILL DETAILS
SCALE: 3" = 1'-0"

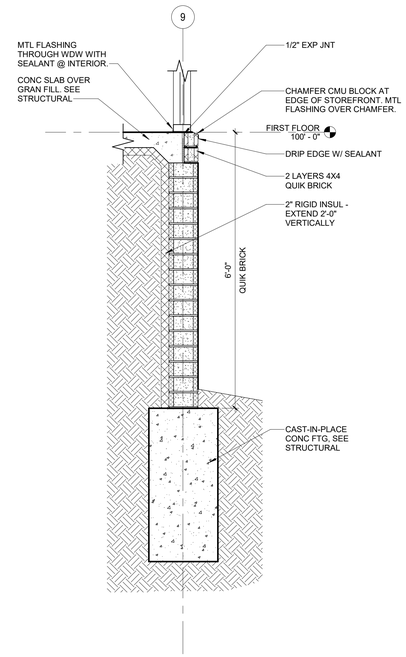

7 WALL DETAIL
SCALE: 3/4" = 1'-0"

DESIGNED: NJB
DRAWN: NJB
CHECKED: DJK

ISSUE DATE: 10/18/2024
REVISIONS:

No.:	DATE:	BY:	DESCRIPTION:

ARCHITECT
DANIEL J. KERNS
A-4463
10/18/24
STATE OF NEBRASKA

SCHEMMER
Design with Purpose. Build with Confidence.
1044 North 115th Street, Suite 300, Omaha, Nebraska 68154 | 402.493.4800
CA0666

LANOHA DEVELOPMENT
HAWTHORNE COURT MULTI-TENANT BUILDING
17662 WELCH PLAZA
OMAHA, NE 68154
WALL DETAILS

PROJECT NO.: 010347.001

A402

SYMBOL LEGEND

PLAN VIEW

SHEAR WALL
MASONRY-VENEER
MASONRY-CMU
STUD WALL

SECTION / ELEVATION VIEW

CONCRETE
FLEXIBLE INSULATION
GRAVEL
GROUT
EARTH / COMPACTED
PLYWOOD
EARTH / NONCOMPACTED
WOOD (FINISH)
RIGID INSULATION
MASONRY-CMU FACE
JOINT FILLER
MASONRY-CMU
STEEL
MASONRY-VENEER
GYPSUM

REFERENCE LEGEND

HEADER CALLOUT IN STUD WALL — H-X — HEADER DESIGNATION

LINTEL CALLOUT IN MASONRY WALL — L-X — LINTEL DESIGNATION

METAL STUD WALL CALLOUT — X — LETTER INDICATES METAL STUD WALL TYPE

CIP WALL CALLOUT — X — LETTER INDICATES CIP WALL TYPE

PRECAST CONC WALL CALLOUT — X — LETTER INDICATES PRECAST CONC WALL TYPE

CMU WALL CALLOUT — X — LETTER INDICATES CMU WALL TYPE

SHEAR WALL CALLOUT — SHEAR WALL TYPE 'X'; MIN L = X'-X" — SHEAR WALL TYPE DESIGNATION; SHEAR WALL LENGTH

WALL FOOTING CALLOUTS — GB1-X: GRADE BEAM DESIGNATION; CF1-X: CONTINUOUS FOOTING DESIGNATION; TS1-X: THICKENED SLAB DESIGNATION

PAD FOOTING CALLOUTS — F1-X — REFERENCE DESIGNATION

PILE CAP CALLOUT — 0001; [T.O.P. = 100'-0"]; [T.O.P. = X000.00'] — REFERENCE DESIGNATION; ARCH ELEVATION; CIVIL ELVATION

REFERENCE NOTE — X — REFERENCE DESIGNATION

ROOM / FRAMING ELEVATION — ELEVATION LETTER; DIRECTION OF VIEW; SHEET NUMBER

EXTERIOR ELEVATION — DIRECTION OF VIEW; ELEVATION LETTER; SHEET NUMBER

PLAN DETAIL — X; XX-XX — DETAIL NUMBER; SHEET NUMBER

SECTION/ DETAIL — X; XX-XX; SIM — SECTION/DETAIL NUMBER; SHEET NUMBER; INDICATES DIRECTION OF VIEW

NEW COLUMN — X — LETTER INDICATES NEW COLUMN LINE

EXISTING COLUMN — X — LETTER INDICATES EXISTING COLUMN LINE

MATCHLINE — AREA A / AREA B

LEVEL — NAME; ELEVATION — LEVEL CALLOUT DESIGNATION; ELEVATION DESIGNATION

TITLE MARKER — 1; VIEW NAME; SCALE: 1/8" = 1'-0" — GRAPHIC AREA FOR DRAWING; DETAIL NUMBER; TITLE; SCALE OF THE DRAWING

NORTH ARROW — NORTH; PLAN NORTH; TRUE NORTH

ABBREVIATIONS

AB	ANCHOR BOLT
ACI	AMERICAN CONCRETE INSTITUTE
AFF	ABOVE FINISH FLOOR
AGG	AGGREGATE
AISC	AMERICAN INSTITUTE OF STEEL CONSTRUCTION
AL	ALUMINUM
ANCH	ANCHOR
ANSI	AMERICAN NATIONAL STANDARDS INSTITUTE
APPD	APPROVED
APPROX	APPROXIMATE
ARCH	ARCHITECTURAL OR ARCHITECT
AUTO	AUTOMATIC
AVG	AVERAGE
L	ANGLE
BL	BUILDING LINE
BLDG	BUILDING
BLKG	BLOCKING
BO	BOTTOM OF
BOT	BOTTOM
BRCG	BRACING
BRDG	BRIDGING
BRG	BEARING
BS	BOTH SIDES
BW	BOTH WAYS
C	CHANNEL (STRUCTURAL SHEETS)
CF	CUBIC FEET
CIP	CAST IN PLACE
CJ	CONTROL JOINT
CL	CENTER LINE
CLR	CLEAR
CMU	CONCRETE MASONRY UNIT
COL	COLUMN
COMP	COMPRESSIBLE
CONC	CONCRETE
CONN	CONNECTION
CONSTR JT	CONSTRUCTION JOINT
CONT	CONTINUOUS (CONTINUATION)
CU YD	CUBIC YARDS
D	DEPTH (DEEP)
d	PENNY (as in nail - 10d)
DBL	DOUBLE
DEMO	DEMOLITION
DIA	DIAMETER
DIAG	DIAGONAL
DIM	DIMENSION
DL	DEAD LOAD
DWG	DRAWING
DWLS	DOWELS
EF	EACH FACE
EJ	EXPANSION JOINT
EL	ELEVATION - GRADE OR BUILDING
ELEV	ELEVATOR
EQ	EQUAL
EQUIP	EQUIPMENT
EW	EACH WAY
EXIST	EXISTING
EXPN	EXPANSION
EXT	EXTERIOR
F	FAHRENHEIT
FD	FLOOR DRAIN
FDN	FOUNDATION
FIN	FINISH
FLR	FLOOR
FT	FEET (FOOT)
FTG	FOOTING
FV	FIELD VERIFY
GA	GAGE OR GAUGE
GALV	GALVANIZED
GRTG	GRATING
GWB	GYPSUM WALLBOARD
H or HT	HEIGHT (HIGH)
HDR	HEADER
HK	HOOK
HORIZ	HORIZONTAL(LY)
HPT	HIGH POINT
HS	HIGH STRENGTH
ID	INSIDE DIAMETER
IN	INCH
INSUL	INSULATION
INT	INTERIOR
KIP or K	KILOPOUND (1000 LBS)
KP	KICK PLATE
L	LENGTH (LONG)
LBS	POUNDS
LDG	LOADING
LL	LIVE LOAD
LLBB	LONG LEG BACK TO BACK
LLH	LONG LEG HORIZONTAL
LLV	LONG LEG VERTICAL
LNTL	LINTEL
LONG	LONG LONGITUDINAL
LP	LOW POINT
LT WT	LIGHT WEIGHT
MAS	MASONRY
MATL	MATERIAL
MAX	MAXIMUM
MC	MISCELLANEOUS CHANNELS
MECH	MECHANICAL
MET	METAL
MFG	MANUFACTURING
MFR	MANUFACTURER
MIN	MINIMUM
MISC	MISCELLANEOUS
NIC	NOT IN CONTRACT
NO	NUMBER
NR	NOT REQUIRED
NTS	NOT TO SCALE
OC	ON CENTER(S)
OCEW	ON CENTER EACH WAY
OD	OUTSIDE DIAMETER
OH	OVERHEAD
OPNG	OPENING
OPP	OPPOSITE
OZ	OUNCE
PC	PRECAST
PERF	PERFORATED
PLWD	PLYWOOD
POL	POLISH(ED)
PREFAB	PREFABRICATED
PS	PRESSED STEEL
PSF	POUNDS PER SQUARE FOOT
PSI	POUNDS PER SQUARE INCH
QTY	QUANTITY
R	RADIUS
RD	ROOF DRAIN
REF	REFERENCE
REINF	REINFORCEMENT
REQD	REQUIRED
RTU	ROOF TOP UNIT
SCHED	SCHEDULE
SDI	STEEL DECK INSTITUTE
SF	SQUARE FOOT (FEET)
SHTG	SHEATHING
SIM	SIMILAR
SJI	STEEL JOIST INSTITUTE
SL	SNOW LOAD
SLBB	SHORT LEG BACK TO BACK
SPEC	SPECIFICATIONS
SS	STAINLESS STEEL
STD	STANDARD
STGR	STRINGER
STIFF	STIFFENER
STIRR	STIRRUPS
STL	STEEL
STR	STRUCTURAL
SUSP	SUSPENDED
TEMP	TEMPERATURE
TO	TOP OF
TOB	TOP OF BEAM
TOC	TOP OF CONCRETE
TOF	TOP OF FOOTING
TOS	TOP OF STEEL
TOW	TOP OF WALL
TRANS	TRANSVERSE
TYP	TYPICAL
UNEX	UNEXCAVATED
UNO	UNLESS NOTED OTHERWISE
VERT	VERTICAL
VEST	VESTIBULE
W	WIDE (WIDTH)
W/	WITH
W/O	WITHOUT
WF	WIDE FLANGE
WL	WIND LOAD
WP	WORK POINT
WT	WEIGHT
WWF	WELDED WIRE FABRIC

SCHEDULES

GRADE BEAM SCHEDULE

MARK	WIDTH	DEPTH	LONGITUDINAL REINFORCING	STIRRUPS
GB1-6	1' - 6"	3' - 4"	(3) #5 BARS BOT., (3) #5 BARS TOP	#4 @ 24" O.C.
GB2-0	2' - 0"	3' - 4"	(3) #5 BARS BOT., (3) #5 BARS TOP	#4 @ 24" O.C.
GB2-2	2' - 2"	3' - 4"	(3) #5 BARS BOT., (3) #5 BARS TOP	#4 @ 24" O.C.

PAD FOOTING SCHEDULE

MARK	PLAN SIZE	DEPTH	REINFORCING
F3.0	3'-0" X 3'-0"	3' - 4"	(3) #6 BARS EACH WAY, TOP & BOTTOM
F3.5	3'-5" X 3'-5"	3' - 4"	(4) #6 BARS EACH WAY, TOP & BOTTOM
F4.0	4'-0" X 4'-0"	3' - 4"	(4) #6 BARS EACH WAY, TOP & BOTTOM
F4.5A	4'-6" X 4'-6"	1' - 0"	(5) #5 BARS EACH WAY, BOTTOM
F4.5B	4'-6" X 4'-6"	3' - 4"	(5) #6 BARS EACH WAY, TOP & BOTTOM

CIP WALL REINF. SCHEDULE

MARK	WIDTH	VERTICAL REINF.			HORIZONTAL REINF.		
		INSIDE FACE	CENTERED	SOIL FACE	INSIDE FACE	CENTERED	SOIL FACE
A	0' - 8"	#6 @ 1'-0" O.C.	--	#6 @ 1'-0" O.C.	#4 @ 1'-0" O.C.	--	#4 @ 1'-0" O.C.

MASONRY WALL REINF. SCHEDULE

MARK	WIDTH	REINFORCING	
		VERTICAL	HORIZONTAL
A	0' - 8"	#5 @ 32" O.C. MAX.	LADDER TYPE - 2 - W1.7 WIRES @ 16" O.C.

MASONRY LINTEL SCHEDULE

MARK	BEARING	REINFORCING
L-1	8"	16" LINTEL W/ (2) #5 CONT. @ BOT.
L-2	8"	24" LINTEL W/ (2) #5 CONT. @ BOT.

PROVIDE (2) - #5 FULL HEIGHT JAMB BARS AT FIRST CELL BEYOND OPENING EACH SIDE. CLEAR DISTANCE FROM BAR TO FACE ON CMU SHALL BE 2 1/2" FOR EACH BAR. SEE TYPICAL DETAIL ON S201 FOR MASONRY REBAR LAP SPLICE REQUIREMENTS

METAL STUD WALL SCHEDULE

MARK	MATERIAL	GAUGE	MIN. YIELD STRENGTH	SPACING	NOTES
A	600S162	18	33 KSI	16"	TYPICAL EXTERIOR NON LOAD BEARING WALLS

METAL DECKING SCHEDULE

LOCATION	DEPTH (IN.)	GAUGE	MIN. I	MIN. S	FINISH	CONNECTION TO SUPPORTING MEMBERS (5/8" DIA. PUDDLE WELD)	SIDE LAPS (#10 SCREWS)	REMARKS
ROOF	1 1/2	22	0.155	0.186	GALVANIZED	36/4 PATTERN	(2) SIDE LAP FASTENERS #10 TEK SCREWS - EA. JOIST SPACE	TYPE "B"

REF. NOTES (X)

PROJECT STRUCTURAL REFERENCED NOTES

1. STRUCTURAL STOOP - SEE SHEET S201 FOR TYPICAL DETAIL. REFERENCE ARCHITECTURAL DRAWINGS FOR STOOP DIMENSIONS.
2. 'C.J.' INDICATES CONTROL JOINT - SEE TYPICAL DETAIL ON SHEET S201 AND STRUCTURAL NOTES FOR MORE INFORMATION.
3. PROVIDE (2) #5 X 3'-0" LONG BARS @ 4" O.C. CENTERED IN SLAB AT ALL RE-ENTRANT CORNERS WITHOUT CONTROL JOINTS (CJ) AND AT ENDS OF CONTROL JOINTS TERMINATED WITHIN SLAB – TYPICAL.
4. SYMBOL INDICATES FOOTING STEP - SEE TYPICAL DETAIL ON S201.
5. 1 1/2" B' 22 GA. METAL ROOF DECK. SEE METAL DECK SCHEDULE ON S00 FOR MORE INFORMATION.
6. RETAINING WALL - SEE CIVIL DRAWINGS
7. 1'-6"X1'-6" CONC PIER. #3 TIES (14 X 14) AT 12" O.C. PROVIDE 3 TIES WITHIN THE TOP 3" OF PIER AND (4) - #6 VERTICAL DOWELS.
8. JOIST SUPPLIER DESIGN JOIST TOP CHORD FOR 5000# AXIAL LOAD DESIGN JOIST SEAT TO TRANSFER AXIAL LOAD (ULTIMATE LEVEL) TYPICAL AT ALL JOIST ALIGNED WITH COLUMNS ALONG GRID C
9. ROOF HATCH - SEE ARCH. JOIST SUPPLIER COORDINATE JOIST BRIDGING WITH ROOF HATCH. SEE TYPICAL ROOF OPENING DETAIL S302
10. PRE-MANUFACTURED CANOPY - SEE ARCH. SEE PLAN FOR SNOW DRIFT LOAD TO CANOPY
11. 69.5 PSF SNOW DRIFT AT PEAK OF DRIFT (INCLUDES BALANCE FLAT ROOF SNOW LOAD 17.5 PSF)
12. 57 PSF SNOW DRIFT AT BASE OF DRIFT (INCLUDES BALANCE FLAT ROOF SNOW LOAD 17.5 PSF)

STRUCTURAL SHEET LIST

DESIGNED: JMP
DRAWN: JMP
CHECKED: KMW

ISSUE DATE: 10/18/2024
REVISIONS:

No.:	DATE:	BY:	DESCRIPTION:

PROFESSIONAL STRUCTURAL ENGINEER
JOSHUA M. PEARCE
E-17798
10/18/2024
STATE OF NEBRASKA

SCHEMMER
Design with Purpose. Build with Confidence.
1044 North 115th Street, Suite 300, Omaha, Nebraska 68154 | 402.493.4800
CA0666

LANOHA DEVELOPMENT
HAWTHORNE COURT MULTI-TENANT BUILDING
17662 WELCH PLAZA
OMAHA, NE 68154

STRUCTURAL INFO SHEET

PROJECT NO.: 010347.001

S 00

C:\Users\jpearce\Documents\Revit_temp\010347001-STRUC_R23_jpearce.rvt
10/18/2024 12:57:32 PM

APPLICABLE CODES AND STANDARDS

1. 2018 INTERNATIONAL BUILDING CODE
2. ACI 318-14 - BUILDING CODE REQUIREMENTS FOR STRUCTURAL CONCRETE
3. TMS 402-16 - BUILDING CODE REQUIREMENTS FOR MASONRY STRUCTURES
4. AISC 360-16 - SPECIFICATION FOR STRUCTURAL STEEL BUILDINGS
5. AISI S100-16 - NORTH AMERICAN SPECIFICATION FOR THE DESIGN OF COLD-FORMED STEEL STRUCTURAL MEMBERS
6. AWC NDS-2018 - NATIONAL DESIGN SPECIFICATION FOR WOOD CONSTRUCTION WITH 2015 SUPPLEMENT

DESIGN CRITERIA

FLOOR LIVE LOAD	PSF
1. SIDEWALKS, VEHICULAR DRIVEWAYS	250
2. STAIRS AND EXIT WAYS	100
3. STORES - RETAIL - FIRST FLOOR	100

ROOF LIVE LOAD	PSF
1. ROOF LIVE LOAD (MINIMUM, NON-REDUCIBLE)	25

<u>OTHER LIVE LOADS</u>

1. OFFICE PARTITIONS (LIVE LOAD):	15 PSF
2. PARTITIONS (LATERAL LOAD):	5 PSF
3. RAILING (LATERAL LOAD AT TOP):	50 PLF OR 200 LB
4. MECHANICAL EQUIPMENT ROOM	150 PSF OR EQUIP. WEIGHT IF GREATER

<u>ROOF SNOW LOAD</u>

1. GROUND SNOW LOAD (P_g):	25 PSF
2. FLAT-ROOF SNOW LOAD (P_f):	20 PSF
3. DRIFT SNOW LOAD	PER ASCE 7-16
4. SNOW EXPOSURE FACTOR (C_e):	1.0
5. SNOW LOAD IMPORTANCE FACTOR (I):	1.0
6. THERMAL FACTOR (C_t):	1.0

<u>EARTHQUAKE DESIGN DATA</u>

1. SEISMIC IMPORTANCE FACTOR (I):	1.0
2. RISK CATEGORY:	II
3. 0.2 SEC SPECTRAL RESPONSE ACCELERATION (S_S):	0.0746
4. 1.0 SEC SPECTRAL RESPONSE ACCELERATION (S_1):	0.045
5. SITE CLASS:	D
6. 0.2 SEC SPECTRAL RESPONSE COEFFICIENT (S_{DS}):	0.080
7. 1.0 SEC SPECTRAL RESPONSE COEFFICIENT (S_{D1}):	0.072
8. SEISMIC DESIGN CATEGORY:	B
9. BASIC SEISMIC-FORCE-RESISTING SYSTEM:	
A. CMU SHEAR WALLS	
10. DESIGN BASE SHEAR (V):	26.57 KIPS
11. SEISMIC RESPONSE COEFFICIENT (C_S):	0.0398
12. RESPONSE MODIFICATION FACTOR (R):	2.0
13. ANALYSIS PROCEDURE USED:	
A. EQUIVALENT LATERAL FORCE PROCEDURE	

<u>WIND DESIGN DATA</u>

1. ULTIMATE DESIGN WIND SPEED (V_{ult}):	111 MPH
2. NOMINAL DESIGN WIND SPEED (V_{asd}):	90 MPH
3. RISK CATEGORY:	II
4. WIND EXPOSURE:	CATEGORY B
5. INTERNAL PRESSURE COEFFICIENT (GC_{pi}):	+/-0.18

MATERIAL DATA

<u>CONCRETE AND REINFORCING</u>

1. CONCRETE STRENGTH (f'_c @ 28 DAYS)

A. FOOTINGS	3,000 PSI
B. FOUNDATION WALLS	4,500 PSI
C. GRADE SUPPORTED SLABS	4,000 PSI
D. CONCRETE NOT SPECIFIED	3,000 PSI

2. ALL CONCRETE EXPOSED TO FREEZE-THAW CONDITIONS SHALL HAVE A MINIMUM STRENGTH (f'_c @ 28 DAYS) OF 4,500 PSI. THIS DOES NOT INCLUDE FOOTINGS/GRADE BEAMS THAT ARE COVERED BY SOIL.
3. CEMENT TYPE: PORTLAND TYPE 1L
4. AGGREGATES
   A. NORMAL WEIGHT, 1 1/2" MAX. SIZE - ASTM C33
   B. PROVIDE AGGREGATES FREE OF MATERIALS WITH DELETERIOUS REACTIVITY TO ALKALI IN CEMENT, FROM A SINGLE SOURCE WITH DOCUMENTED SERVICE RECORD DATA OF AT LEAST 10 YEARS SATISFACTORY SERVICE IN SIMILAR APPLICATIONS AND SERVICE CONDITIONS USING SIMILAR AGGREGATES AND CEMENTITIOUS MATERIALS.

5. REINFORCING STEEL	ASTM A615, GRADE 60
6. REINFORCING STEEL	ASTM A706, WELDABLE
7. WELDED WIRE FABRIC	ASTM A185
8. PREFORMED EXPANSION JOINT (1/2")	ASTM D1751

<u>MASONRY</u>

1. MASONRY STRENGTH (f'_m @ 28 DAYS)	2000 PSI
2. CONCRETE UNITS	ASTM C90 NORMAL WEIGHT
3. UNIT COMPRESSIVE STRENGTH	2,000 PSI (BASED ON NET AREA)
4. MORTAR TYPE	ASTM C270, TYPE S
5. GROUT TYPE	ASTM C476, 3/8" MAX. AGGREGATE SIZE
6. MORTAR STRENGTH (28 DAYS)	1,800 PSI
7. GROUT STRENGTH (28 DAYS)	ASTM C476 - 2,000 PSI
8. WIRE REINFORCING	ASTM A82, STD. LADDER TYPE - 9 GAUGE ZINC COATED PER ASTM A116 - (DUR-O-WALL OR APPROVED EQUAL @ 16" O.C. VERTICAL SPACING)

<u>STEEL</u>

1. STRUCTURAL STEEL (WIDE FLANGES)	ASTM A992, GRADE 50
2. STRUCTURAL STEEL (ALL OTHER TYPES)	ASTM A36
3. STRUCTURAL STEEL PIPE	ASTM A53, GRADE B, SCH. 40
4. STRUCTURAL TUBE	ASTM A500, GRADE C
5. ANCHOR RODS	ASTM F1554, GRADE 55 WITH WELDING SUPPLEMENT S1
6. BOLTED CONNECTIONS	ASTM F3125, GRADE A325N
7. WELDED CONNECTIONS	E70XX ELECTRODES
8. WELDED CONNECTIONS (GALVANIZED)	E6010 OR E6011 ELECTRODES
9. HEADED CONCRETE ANCHORS (HCA)	ASTM A108 GRADES C1010 THROUGH C1020 (F_u=55 KSI)
10. DEFORMED BAR ANCHORS (DBA)	ASTM A108 & A496 (F_y=70 KSI)
11. METAL DECKING	ASTM A611 OR ASTM A653-94
12. STEEL BAR JOISTS	SJI CRITERIA
13. LIGHT GAUGE STEEL STUDS/JOISTS	
A. 12 TO 16 GAUGE (G60 GALV.)	ASTM A1003 GRADE ST50H (F_y=50 KSI)
B. 18+ GAUGE (G60 GALV.)	ASTM A1003 GRADE ST33H (F_y=33 KSI)

STRUCTURAL NOTES

1. ALL WORK SHALL CONFORM TO THE REQUIREMENTS OF THE APPLICABLE BUILDING CODE.
2. THE STRUCTURE HAS BEEN DESIGNED TO RESIST DESIGN LOADS ONLY AS A COMPLETED STRUCTURE
   A. APPLICATION OF ANY LOADS TO THE PARTIALLY COMPLETED STRUCTURE SHALL BE CONSIDERED BY THE CONTRACTOR AND SO INCLUDED IN THE DESIGN OF THE SHORING, BRACING, FORMWORK, AND ANY OTHER SUPPORTING ELEMENTS PROVIDED FOR CONSTRUCTION OF THE STRUCTURE.
   B. WHERE CONSTRUCTION MATERIAL AND EQUIPMENT ARE TEMPORARILY STORED ON THE ROOF OR FLOOR FRAMING, THEY SHALL BE DISTRIBUTED SO THAT THE DESIGN LIVE LOAD AT THE LOADED AREA IS NOT EXCEEDED.
   C. DO NOT BACKFILL AGAINST WALLS OR OTHER STRUCTURAL ELEMENTS UNTIL SUCH ELEMENTS HAVE REACHED THEIR INTENDED STRENGTH, HAVE BEEN ADEQUATELY BRACED, AND/OR HAVE OTHER INTEGRAL STRUCTURAL ELEMENTS IN PLACE WHICH ARE INTENDED TO RESIST THE LATERAL EARTH LOADS.
3. LATERAL LOAD RESISTING SYSTEM: ALL LATERAL LOAD RESISTANCE AND STABILITY IN THE COMPLETED STRUCTURE IS PROVIDED BY:
   A. N-S DIRECTION: ORDINARY REINFORCED MASONRY SHEAR WALLS
   B. E-W DIRECTION: ORDINARY REINFORCED MASONRY SHEAR WALLS
   C. ROOF DIAPHRAGM: METAL DECK
4. STEEL STABILITY: STRUCTURAL STEEL FRAMING INDICATED IN THESE PLANS REQUIRES INTERACTION WITH NON-STRUCTURAL STEEL ELEMENTS FOR STRENGTH AND/OR STABILITY. SEE PLANS FOR SPECIFIC LOCATIONS OF THESE NON-STRUCTURAL STEEL ELEMENTS WHICH ARE LISTED BELOW:
   A. CMU SHEARWALLS
   B. METAL ROOF DECKING
5. DETAILS ON THE DRAWINGS INDICATED AS "TYPICAL" APPLY IN ALL AREAS WHERE CONDITIONS SIMILAR TO THE DETAIL OCCUR.
6. THE STRUCTURAL DRAWINGS ARE NOT INTENDED FOR USE AS SHOP ERECTION DRAWINGS. REPRODUCTION OF THESE DRAWINGS IN LIEU OF PREPARATION OF SHOP ERECTION DRAWINGS SIGNIFIES THE USERS' ACCEPTANCE THAT ALL INFORMATION SHOWN IS CORRECT AND APPROPRIATE FOR SHOP DRAWINGS AND THAT THE USER WILL BE FULLY RESPONSIBLE FOR EXPENSES THAT MAY OCCUR FROM SAID ACCEPTANCE.
7. UNLESS SPECIFICALLY NOTED, THERE ARE NO PROVISIONS MADE FOR FUTURE FLOORS, ROOFS, OR OTHER LOADS.

COORDINATION/VERIFICATION

1. CONTRACTOR SHALL CHECK AND VERIFY ALL DIMENSIONS AND EXISTING CONDITIONS AND REPORT ANY DISCREPANCIES TO THE ENGINEER BEFORE PROCEEDING WITH ANY PHASE OF THE WORK.
2. ANY PROPRIETARY STRUCTURAL SYSTEMS THAT ARE COMPOSED OF COMPONENTS TO BE FIELD ERECTED SHALL BE SUPERVISED BY THE SUPPLIER DURING MANUFACTURING, DELIVERY, HANDLING, STORAGE, AND ERECTION IN ACCORDANCE WITH THE INSTRUCTIONS PREPARED BY THE SUPPLIER.
3. CROSS REFERENCE STRUCTURAL DRAWINGS WITH MECHANICAL AND ELECTRICAL DRAWINGS, AND WITH THE ACTUAL EQUIPMENT SUPPLIED TO THE PROJECT, FOR THE LOCATION AND SIZE OF ALL SLAB OPENINGS, SLEEVES, INSERTS, FLOOR DEPRESSIONS, BLOCK-OUTS, CURBS, ANCHORS, BOLTS, ETC. REQUIRED FOR INSTALLATION.
4. PROVIDE ADEQUATE STRUCTURAL FRAMING AS APPROVED BY THE ENGINEER FOR ALL REQUIRED MECHANICAL OPENINGS THROUGH SLABS, WALLS, FLOOR DECK, ETC., AND SUPPORT OF ALL MECHANICAL EQUIPMENT. OPENINGS SHALL NOT BE PERMITTED THROUGH BEAMS UNLESS SPECIFICALLY DETAILED BY THE ENGINEER.
5. REFER TO ARCHITECTURAL DRAWINGS FOR ALL SURFACE FINISHES, DIMENSIONS, AND LOCATIONS OF SLAB DROPS, MASONRY CONTROL JOINTS, AND WALL OPENING REQUIREMENTS.

GEOTECHNICAL

1. BASIS OF DESIGN: THE FOUNDATION SYSTEM DESIGN IS BASED ON THE RECOMMENDATIONS OF GEOTECHNICAL REPORT NO. 20530.00 DATED OCTOBER 26, 2020 PREPARED BY THIELE GEOTECH, INC.
2. FOUNDATION SYSTEM: SHALLOW FOOTINGS; GRADE BEAMS
3. MAXIMUM ALLOWABLE SOIL BEARING CAPACITY — 2,000 PSF
4. LATERAL EARTH PRESSURE:
   A. PASSIVE RESISTANCE — 180 PCF
   B. ACTIVE PRESSURE — 50 PCF
   C. AT-REST PRESSURE — 65 PCF
5. SUBGRADE PREPARATION:
   A. HEAVILY ORGANIC OR ROOT INFESTED TOPSOIL SHALL BE EXCAVATED AND DISCARDED OR STOCKPILED FOR LATER USE IN COVERING FINISHED LANDSCAPED AREAS AFTER CONSTRUCTION. REMOVE TOPSOIL TO A MINIMUM DEPTH OF 8 INCHES. DEEPER STRIPPING SHALL BE DONE IF ORGANIC MATERIALS REMAIN BELOW A DEPTH OF 8 INCHES.
   B. REMOVE ALL EXISTING STRUCTURES TO BE DEMOLISHED PRIOR TO GRADING. THIS INCLUDES PAVING, SIDEWALKS, AND OTHER MISCELLANEOUS SMALL STRUCTURES.
6. SURCHARGE REQUIREMENTS:
   A. 3 FEET OVER AREAS TO RECIEVE 3FT OR MORE FILL AS INDICATED IN GEOTECHNICAL REPORT. GC COORDINATE WITH GEOTECH REPORT FOR ADDITIONAL INFORMATION.
7. STRUCTURAL FILL REQUIREMENTS:
   A. CLEAN, INORGANIC, LOW TO MEDIUM PLASTICITY LEAN CLAY (CL) OR SILT (ML), OR A COMBINATION OF THESE TWO MATERIALS
   B. MAXIMUM LIQUID LIMIT (LL) — 45
   C. MAXIMUM PLASTICITY INDEX — 22
   D. WATER CONTENT (% OF OPTIMUM) — +/-3%
   E. MAXIMUM LOOSE LIFT — 8"
   F. MINIMUM COMPACTION — 95% (STANDARD PROCTOR TEST ASTM D-698)
8. SPREAD FOOTINGS SHALL BE PLACED ON NEAT, CLEAN AND DRY EXCAVATIONS. EXTREME CARE SHALL BE TAKEN WHEN EXCAVATING NEAR THE BEARING SURFACE. FOOT TRAFFIC SHALL BE KEPT TO A MINIMUM NECESSARY TO PLACE THE FOOTING REINFORCEMENT AND CONCRETE.
9. CONTRACTOR SHALL PROVIDE FOR ADEQUATE DRAINAGE OF SURFACE WATER AWAY FROM THE STRUCTURE AND EXCAVATED AREAS DURING CONSTRUCTION. THIS INCLUDES NECESSARY PUMPING, TRENCHING, BACKFILL AND/OR DIKE CONSTRUCTION.
10. GRANULAR SUBBASE UNDER SLAB ON GRADE:
   A. MINIMUM THICKNESS — SEE PLAN
   B. MINIMUM COMPACTION — 95% (STANDARD PROCTOR TEST ASTM D-698)
   C. GRADATION REQUIREMENTS
      a. 100% PASSING THE 3/4" SIEVE
      b. LESS THAN 15% PASSING THE 100 SIEVE
      c. LESS THAN 2% PASSING THE 200 SIEVE

CAST-IN-PLACE CONCRETE (033000)

<u>GENERAL CONCRETE REQUIREMENTS</u>

1. CONCRETE BATCH DESIGN(S) SHALL BE PROPORTIONED AND PRODUCED IN ACCORDANCE WITH ACI 318, IN PARTICULAR CHAPTER 5, AND ACI 301. MIX AND DELIVER IN ACCORDANCE WITH ASTM C94.
2. CONCRETE STRENGTH: SEE MATERIAL DATA NOTES
3. SLUMP LIMITS
   A. GRADE SUPPORTED SLABS, SUSPENDED SLABS AND CONCRETE TOPPINGS: 5 INCHES OF SLUMP, PLUS OR MINUS 1 INCH.
   B. CONCRETE WITH PLASTICIZERS: 8 INCHES OF SLUMP, PLUS OR MINUS 1 INCH.
   C. ALL OTHER CONCRETE: 4 INCHES OF SLUMP, PLUS OR MINUS 1 INCH.
4. MAXIMUM W/C RATIO: 0.45
5. AIR ENTRAINMENT
   A. GRADE SUPPORTED SLABS, SUSPENDED SLABS AND CONCRETE TOPPINGS: DO NOT ALLOW AIR CONTENT OF TROWEL-FINISHED FLOORS TO EXCEED 3%.
   B. CONCRETE EXPOSED TO WEATHER: 5% MINIMUM AIR CONTENT
   C. ALL OTHER CONCRETE: 5.5% AIR CONTENT, PLUS OR MINUS 1.5%.
6. ADMIXTURES: SUBMIT AS REQUIRED FOR APPROVAL
7. FLY ASH: MAX. 25% OF CEMENT CONTENT
8. CONSTRUCTION JOINTS MUST HAVE PRIOR REVIEW BY THE ENGINEER. ALL CONTINUOUS REINFORCING SHALL BE CARRIED THROUGH THE JOINT.
9. CONSTRUCTION JOINT LOCATIONS:
   A. SPANNING MEMBERS — NEAR MIDSPAN
   B. FND WALLS AND FOOTINGS — MIDWAY BETWEEN COLUMNS
   C. WALLS — DO NOT ALIGN WITH FOOTING JOINTS
10. CONCRETE TO CONCRETE COLD JOINTS - PROVIDE 1/4" INTENTIONALLY ROUGHENED SURFACE AT ALL HORIZONTAL JOINTS.
11. EXPOSED CORNERS: PROVIDE A 3/4" CHAMFER AT ALL EXPOSED CONCRETE CORNERS.
12. CURING: CONCRETE SHALL BE MAINTAINED IN A MOIST CONDITION FOR A MINIMUM OF SEVEN DAYS AFTER ITS PLACEMENT. IF FORMWORK IS REMOVED PRIOR TO SEVEN DAYS, APPLY MOIST CURING TO NEWLY EXPOSED SURFACES. APPROVED CURING COMPOUNDS MAY BE USED IN LIEU OF MOIST CURING.
13. REINFORCING BAR WELDING: ABSOLUTELY NO WELDING OF REINFORCING BARS OR TORCHING TO BEND REINFORCING BARS SHALL BE ALLOWED WITHOUT THE SPECIFIC APPROVAL OF THE ENGINEER.
14. MINIMUM CONCRETE CLEAR COVER:
   A. FOOTINGS
      a. TOP — 2"
      b. BOTTOM — 3"
      c. SIDES — 3"
   B. FOUNDATION WALLS
      a. TOP — 1-1/2"
      b. BOTTOM — 3"
      c. SIDES — 2"
   C. GIRDERS/BEAMS/JOISTS — 1-1/2"
   D. EXTERIOR WALLS
      a. EXTERIOR FACE — 2"
      b. INTERIOR FACE — 3/4"
   E. INTERIOR WALLS — 3/4"
   F. INTERIOR SLABS (TOP) — SEE TYPICAL SLAB JOINT DETAIL ON SHEET S201
   G. EXTERIOR SLABS (TOP) — 2"
   H. COLUMNS
      a. EXTERIOR — 2"
      b. INTERIOR — 1-1/2"
   I. OTHER COVER REQUIREMENTS SHALL BE AS NOTED IN APPLICABLE DETAILS.
15. BAR SUPPORT ACCESSORIES SHALL BE PROVIDED IN ACCORDANCE WITH THE LATEST ACI MANUAL OF STANDARD PRACTICE FOR DETAILING REINFORCED CONCRETE STRUCTURES
   A. BEAM REINFORCING: ON BAR BOLSTERS @ 4 FT. O.C. MAX.
   B. SLAB REINFORCING: ON BAR BOLSTERS @ 4 FT. O.C. MAX.
   C. CONCRETE EXPOSED TO VIEW USE PLASTIC COATED OR GALV. LEGS
   D. CONCRETE W/ SANDBLAST FINISH USE STAINLESS STEEL SUPPORTS
   E. NO ROCKS, CLAY TILE, OR CLAY BRICK SHALL BE USED TO SUPPORT REINFORCING.
16. NON-METALLIC, SHRINKAGE-RESISTANT GROUT
   A. GROUT SHALL MEET REQUIREMENTS OF ASTM C 1107
   B. GROUT SHALL BE FACTORY-PACKAGED, NON-METALLIC AGGREGATE GROUT
   C. GROUT SHALL BE NON-CORROSIVE AND NON-STAINING
   D. MIX GROUT WITH WATER TO CONSISTENCY SUITABLE FOR APPLICATION AND A 30-MINUTE WORKING TIME.
17. VOID FILL: FOAM MATERIAL USED FOR VOID FILL SHALL BE RIGID CELLULAR, EXTRUDED POLYSTYRENE INSULATION COMPLYING WITH ASTM C578, TYPE IV, 25 PSI COMPRESSIVE STRENGTH MINIMUM.
18. REINFORCING SHOP DRAWINGS: REINFORCING SUPPLIER SHALL PROVIDE COMPLETE PLACEMENT AND FABRICATION DRAWINGS FOR ALL REINFORCING INCLUDING THE LOCATION AND SIZE OF ALL ACCESSORIES AND SUPPORTS.
19. COLD WEATHER CONSTRUCTION:
   A. COVER GROUND SURFACE WITH INSULATING BLANKETS AS REQUIRED TO MAINTAIN GROUND TEMPERATURE.
   B. POUR CONCRETE FOOTINGS WITHIN 24 HOURS OF DIGGING.
   C. WHEN AVERAGE HIGH AND LOW TEMPERATURE IS EXPECTED TO FALL BELOW 40 DEG F FOR THREE SUCCESSIVE DAYS, MAINTAIN DELIVERED CONCRETE MIXTURE TEMPERATURE WITHIN THE TEMPERATURE RANGE REQUIRED BY ACI 301.
   D. DO NOT PLACE CONCRETE IN CONTACT WITH SURFACES LESS THAN 35 DEG F (1.7 DEG C), OTHER THAN REINFORCING STEEL.
   E. PROVIDE INSULATING BLANKETS OVER CONCRETE WHILE CURING AS REQUIRED.
   F. VERIFY CONCRETE STRENGTH PRIOR TO THE APPLICATION OF STRUCTURAL LOADS TO THE CONCRETE.
   G. IN EXTREME WEATHER CONDITIONS CONSIDER UTILIZING A GROUND HEATING SYSTEM.
   H. ALL FINAL WINTER FOUNDATION CONSTRUCTION PROCEDURES SHALL BE REVIEWED AND APPROVED BY THE GEOTECHNICAL ENGINEER.
20. CONCRETE TESTING SHALL BE PERFORMED ACCORDING TO THE FOLLOWING REQUIREMENTS:
   A. TESTING FREQUENCY: OBTAIN ONE COMPOSITE SAMPLE FOR EACH DAY'S POUR FOR EACH CONCRETE MIXTURE EXCEEDING 5 CUBIC YARDS, BUT LESS THAN 25 CUBIC YARDS, PLUS ONE SET FOR EACH ADDITIONAL 50 CUBIC YARDS OR FRACTION THEREOF.
21. CONCRETE SHALL BE PLACED WITHIN 90 MINUTES OF ADDING WATER. CONTRACTOR SHALL REJECT ANY CONCRETE THAT HAS BEEN IN THE MIXING TRUCK MORE THAN 90 MINUTES AFTER ADDING WATER.

CAST-IN-PLACE CONCRETE (033000) CONTINUED

<u>SLAB ON GRADE REQUIREMENTS</u>

1. SLAB THICKNESS: SEE PLAN
2. SLAB REINFORCING: SEE PLAN
3. SYNTHETIC MICRO-FIBER REINFORCING SHALL BE PROVIDED IN ALL SLABS ON GRADE AT A RATIO OF 1 1/2 POUNDS PER CUBIC YARD OF CONCRETE. PROVIDE MONOFILAMENT POLYPROPYLENE MICRO-FIBERS ENGINEERED AND DESIGNED FOR USE IN CONCRETE, COMPLYING WITH ASTM C 1116, TYPE III, 1/2 TO 1 1/2 INCHES LONG. [delete if not using fibers in concrete mix]
4. GRANULAR SUBBASE: SEE GEOTECHNICAL NOTES
5. VAPOR RETARDER: ASTM E 1745, CLASS A. SEE PLAN FOR THICKNESS. LAP AND TAPE ALL JOINTS AND HOLES.
6. CRACK CONTROL JOINTS (WHETHER CONSTRUCTION JOINTS OR SAWED JOINTS) IN SLABS ON GRADE SHALL OCCUR AS SHOWN AND ACROSS ALL DOOR OPENINGS. LOCATE JOINTS AT RE-ENTRANT CORNERS OF SLABS.
   A. MAXIMUM SPACING OF CONTROL JOINTS: 12 FEET
7. CURING: CONCRETE SHALL BE MAINTAINED IN A MOIST CONDITION FOR A MINIMUM OF SEVEN DAYS AFTER ITS PLACEMENT. APPROVED CURING COMPOUNDS MAY BE USED IN LIEU OF MOIST CURING. CURING COMPOUNDS SHALL BE NON-RESIDUAL TYPE AND COMPATIBLE WITH BONDING OF FLOOR COVERING AND/OR SPECIFIED SEALER.
8. SEAL ALL EXPOSED CONSTRUCTION/CRACK CONTROL JOINTS.
   A. SEALANT: SEE ARCHITECTURE.
9. FLOOR FINISH CRITERIA:
   A. COMPLY WITH ACI 302.1R RECOMMENDATIONS FOR SCREEDING, RESTRAIGHTENING, AND FINISHING OPERATIONS FOR CONCRETE SURFACES. DO NOT WET CONCRETE SURFACES.
   B. TROWEL FINISH:
      a. APPLY TO SURFACES EXPOSED TO VIEW OR TO BE COVERED WITH RESILIENT FLOORING, CARPET, CERAMIC OR QUARRY TILE SET OVER A CLEAVAGE MEMBRANE OR A THIN-FILM-FINISH COATING SYSTEM.
      b. AFTER APPLYING FLOAT FINISH, CONSOLIDATE CONCRETE BY HAND OR POWER-DRIVEN TROWEL. CONTINUE TROWELING PASSES AND RESTRAIGHTEN UNTIL SURFACE IS FREE OF TROWEL MARKS AND UNIFORM IN TEXTURE.
   C. BROOM FINISH:
      a. APPLY TO EXTERIOR CONCRETE PLATFORMS, STEPS, AND RAMPS.
      b. IMMEDIATELY AFTER FLOAT FINISHINGK, SLIGHTLY ROUGHEN TRAFFICKED SURFACE BY BROOMING WITH FIBER-BRISTLE BROOM PERPENDICULAR TO THE MAIN TRAFFIC ROUTE.
10. FLATNESS CRITERIA: OVERALL VALUES OF FLATNESS, F(F) 35; AND OF LEVELNESS, F(L) 25; WITH MINIMUM LOCAL VALUES OF FLATNESS, F(F) 24; AND OF LEVELNESS, F(L) 17.

<u>ANCHORAGE REQUIREMENTS</u>

1. HEADED CONCRETE ANCHORS (HCA): AUTOMATICALLY END WELDED IN THE SHOP OR FIELD IN ACCORDANCE WITH THE MANUFACTURER'S RECOMMENDATIONS. ANCHOR WELDS SHALL BE TESTED PER AWS SECTION 7.7.
2. POST-INSTALLED MECHANICAL ANCHORS: INSTALL USING MINIMUM TORQUE, EMBEDMENTS, EDGE DISTANCES AND SPACING (UNLESS OTHERWISE NOTED) AS RECOMMENDED BY THE ANCHOR MANUFACTURER.
3. POST-INSTALLED ADHESIVE ANCHORS: INSTALLATION TO MEET MANUFACTURER'S RECOMMENDATIONS (UNLESS NOTED OTHERWISE)INCLUDING MINIMUM EMBEDMENTS, EDGE DISTANCES, SPACING, PROCEDURES, AND CURING TIME PRIOR TO LOADING.
4. POST-INSTALLED ANCHORS SHALL BE LOCATED PER THE DETAILS.
5. AVOID CUTTING OR DAMAGING EXISTING REINFORCING. SHOULD LOCATIONS OF DRILLED HOLES BE FOUND DIRECTLY ALIGNED WITH REINFORCING BARS, NOTIFY ENGINEER FOR NECESSARY ADJUSTMENTS TO THE DESIGN.
6. POST-INSTALLED ANCHORS LOCATED IN PRESTRESSED OR POST-TENSIONED MEMBERS SHALL NOT BE DRILLED UNTIL EXACT LOCATIONS OF TENDONS OR STRANDS ARE DETERMINED USING NON-DESTRUCTIVE METHODS.

UNIT MASONRY (042000)

1. DESIGN CRITERIA: MASONRY SHALL BE CONSTRUCTED PER THE REQUIREMENTS OF ACI 530.
2. UNIT TYPES: REFER TO ARCHITECTURAL DRAWINGS FOR CONCRETE MASONRY UNIT SIZE, FACE, COLOR, JOINTING, ECT.
3. UNIT COMPRESSIVE STRENGTH: SEE MATERIAL DATA NOTES
4. MORTAR: SEE MATERIAL DATA NOTES
5. GROUT: SEE MATERIAL DATA NOTES
6. CMU REINFORCING: UNLESS NOTED OTHERWISE, REINFORCE ALL CMU WALLS WITH VERTICAL #5 @ 32" O.C. FILL ALL REINFORCED CELLS WITH GROUT. MINIMUM GROUT BETWEEN MASONRY AND REINFORCING SHALL BE 1/2". MINIMUM GROUT BETWEEN PAIRS OF REINFORCING BARS SHALL BE 3/4".
   A. PROVIDE #5 VERTICAL REINFORCING AT THE FOLLOWING LOCATIONS:
      a. AT ALL CORNERS OF CMU WALLS
      b. AT ALL ENDS OF CMU WALLS
      c. EACH SIDE OF CONTROL JOINTS
      d. EACH SIDE OF WALL OPENINGS
   B. SEE ARCHITECTURAL DRAWINGS FOR LOCATIONS OF CONTROL JOINTS.
7. BOND BEAMS
   A. LOCATED AT TOP OF ALL CMU WALLS AND WHERE INDICATED IN DETAILS
   B. MINIMUM DEPTH UNLESS OTHERWISE NOTED = 8".
   C. REINFORCING - (2) #4 CONTINUOUS. LAP SPLICE = 28 IN.
   D. CORNER DOWELS - (2) #4 RIGHT ANGLE DOWELS THAT LAP A MINIMUM OF 2'-0" WITH ADJACENT BOND BEAM REINFORCING. IF BOND BEAMS AT INTERSECTING WALLS MEET AT DIFFERENT ELEVATIONS, EXTEND BOTH BOND BEAMS AROUND INTERSECTING CORNER TO FIRST INTERIOR REINFORCED CELL, BUT NOT LESS THAN 4 FEET.
   E. EXTEND BOND BEAMS THROUGH CONTROL JOINTS, BUT INTERRUPT BOND BEAM REINFORCING AT CONTROL JOINTS.
8. LINTELS
   A. PROVIDE (2) #5 BARS IN U-SHAPED LINTEL BEAM, U.N.O. GROUT U-SHAPED COURSE AND ADDITIONAL COURSES IMMEDIATELY ABOVE THE LINTEL. SEE SCHEDULE FOR TOTAL NUMBER OF LINTEL COURSES REQUIRED.
   PROVIDE A MINIMUM OF 8 INCHES BEARING AT EACH END.
9. CONTROL JOINTS: EXCEPT WHERE OFFSETS OR SLIP JOINTS ARE SHOWN, CONTROL JOINTS SHALL BE A CONTINUOUS VERTICAL LINE FROM TOP OF FOOTING TO TOP OF MASONRY WALL. SPACE CONTROL JOINTS AS FOLLOWS:
   A. INTERIOR WALLS — 36 FT. O.C. MAX.
   B. EXTERIOR WALLS — 24 FT. O.C. MAX.
10. COLD WEATHER MASONRY CONSTRUCTION: CONFORM TO "RECOMMENDED PRACTICES AND GUIDE SPECIFICATIONS FOR COLD WEATHER MASONRY CONSTRUCTION" BY INTERNATIONAL MASONRY INDUSTRY ALL-WEATHER COUNCIL.

STRUCTURAL STEEL FRAMING (051200)

<u>GENERAL STRUCTURAL STEEL REQUIREMENTS</u>

1. DESIGN CRITERIA: STRUCTURAL STEEL SHALL BE INSTALLED PER THE REQUIREMENTS OF AISC 360.
2. STRUCTURAL STEEL GRADES: SEE MATERIAL DATA NOTES
3. ANCHOR AND BOLT GRADES: SEE MATERIAL DATA NOTES
4. WELD ELECTRODES: SEE MATERIAL DATA NOTES
5. BEARING CONNECTIONS: UNLESS OTHERWISE NOTED, ALL BEAM CONNECTIONS SHALL BE SIMPLE FRAMED SHEAR BEARING CONNECTIONS IN ACCORDANCE WITH THE AISC "SPECIFICATIONS FOR STRUCTURAL JOINTS USING ASTM A325 OR A490 BOLTS."
6. DESIGN OF CONNECTIONS: BEAM CONNECTIONS SHALL BE AS DETAILED ON THE PLANS. ALTERNATIVE CONNECTIONS, DESIGNED BY A LICENSED ENGINEER FOR THE FABRICATOR, MAY BE UTILIZED PROVIDED THE ALTERNATIVE CONNECTION PROVIDES THE SAME LOAD CARRYING CAPACITY OF THE ORIGINAL DESIGN.
7. SPLICES: STEEL FABRICATOR SHALL VERIFY WITH ENGINEER ALL BEAM SPLICES OTHER THAN THOSE SHOWN ON THE PLANS. ANY FULL PENETRATION SHOP SPLICES APPROVED BY THE ENGINEER SHALL BE INSPECTED BY RADIOGRAPHIC METHODS BY A TESTING LABORATORY APPROVED BY THE ENGINEER AND PAID FOR BY THE FABRICATOR.
8. OPPOSING CONNECTIONS: WHERE BEAMS ARE BOLTED ON TWO SIDES OF A COMMON PLATE OR WEB, THE CONNECTIONS SHALL BE DETAILED WITH AN ADDITIONAL ROW OF BOLTS ON ONE SIDE THAT IS NOT SHARED WITH THE OTHER SIDE TO ALLOW INDEPENDENT BOLTING DURING ERECTION.
9. STEEL PROTECTION: ALL STRUCTURAL STEEL SHALL BE CLEANED PER SSPC SP-2 HAND TOOL CLEANING OR SP-3 POWER TOOL CLEANING AND SHOP PAINTED WITH ONE COAT OF MANUFACTURER'S STANDARD GRAY PRIMER. TOUCH UP SCARRED AREAS WITH THE SAME PAINT AFTER ERECTION.
10. STEEL PROTECTION: WHERE STEEL IS INDICATED AS GALVANIZED, PROVIDE HOT-DIPPED GALVANIZED SURFACE PER ASTM A525, CLASS G60. WHERE WELDING OR OTHER CONSTRUCTION OPERATIONS DAMAGE GALVANIZING, PROVIDE ZINC CHROMATE-TYPE TOUCH UP PAINT TO DAMAGED AREA.
11. SHOP DRAWINGS: STEEL FABRICATOR SHALL PROVIDE COMPLETE ERECTION AND FABRICATION DRAWINGS SHOWING ALL MEMBERS AND CONNECTIONS.
12. SLIDE BEARINGS: WHERE SHOWN ON THE DRAWINGS, TEFLON SLIDE BEARING PADS SHALL BE PROVIDED. BEARING PADS SHALL BE DURA-SLIDE AS MANUFACTURED BY TOBI ENGINEERING, INC. OR APPROVED EQUAL.
13. WELDING: ALL WELDING SHALL BE PERFORMED BY QUALIFIED WELDERS PER AWS STANDARD QUALIFICATION PROCEDURES.

COMPONENTS & CLADDING WIND LOAD

DESIGN WIND PRESSURE (PSF)

EFFECTIVE WIND AREA	ROOF ZONE ZONE 1' +	 -	ROOF ZONE ZONE 1 +	 -	ROOF ZONE ZONE 2 +	 -	ROOF ZONE ZONE 3 +	 -	WALL ZONE ZONE 4 +	 -	WALL ZONE ZONE 5 +	 -
10FT^2	16.0	-17.9	16.0	-31.1	16.0	-41.1	16.0	-56.0	19.5	-21.2	19.5	-26.2
20FT^2	16.0	-17.9	16.0	-29.1	16.0	-38.4	16.0	-50.7	18.7	-20.3	18.7	-24.4
50FT^2	16.0	-17.9	16.0	-26.4	16.0	-35.0	16.0	-43.7	17.5	-19.2	17.5	-22.1
100FT^2	16.0	-17.9	16.0	-24.3	16.0	-32.3	16.0	-38.4	16.6	-18.3	16.6	-20.3
200FT^2	16.0	-16.0	16.0	-22.3	16.0	-29.7	16.0	-33.2	16.0	-17.4	16.0	-18.6
500FT^2	16.0	-16.0	16.0	-19.6	16.0	-26.2	16.0	-26.2	16.0	-16.2	16.0	-16.2
1000FT^2	16.0	-16.0	16.0	-19.5	16.0	-26.2	16.0	-26.2	16.0	-16.2	16.0	-16.2

STEEL JOIST FRAMING (052100)

<u>GENERAL STEEL JOIST REQUIREMENTS</u>

1. JOIST DESIGN CRITERIA: ALL STEEL JOISTS SHALL BE DESIGNED, FABRICATED AND ERECTED IN ACCORDANCE WITH SPECIFICATIONS OF STEEL JOIST INSTITUTE.
2. BRIDGING REQUIREMENTS FOR LONG SPANS SHALL COMPLY WITH OHSA REQUIREMENTS. OTHER BRIDGING SHALL BE BOLTED OR WELDED AT ALL JOISTS AND AT ALL CROSSINGS. BRIDGING SIZE AND LAYOUT SHALL BE AS PER MANUFACTURER'S RECOMMENDATIONS.
3. CONNECTION TO SUPPORTING STEEL: JOISTS SHALL BE CONNECTED TO SUPPORTS AS FOLLOWS:
   A. K SERIES: MINIMUM 1" OF 1/8" FILLET WELD AT BOTH SIDES OF JOIST SEAT.
   B. LH SERIES: MINIMUM OF 2" OF 1/4" FILLET WELD AT BOTH SIDES OF JOIST SEAT.
4. JOISTS AT COLUMN LINES: WHERE COLUMNS ARE NOT FRAMED IN AT LEAST TWO DIRECTIONS WITH STRUCTURAL STEEL MEMBERS, JOISTS AT OR NEAREST COLUMN LINES SHALL BE PROVIDED WITH BOLTED CONNECTIONS FOR STABILITY DURING ERECTION.
5. <u>NET WIND UPLIFT DESIGN</u> STEEL JOIST SUPPLIER SHALL DESIGN JOISTS AND JOIST GIRDERS FOR A NET WIND UPLIFT FORCE. SEE COMPONENTS AND CLADDING WIND TABLE ON THIS SHEET FOR GROSS WIND UPLIFT. USE WIND UPLIFT LOADS WITH STRUCTURE SELF-WEIGHT (DECK, JOISTS, JOIST GIRDERS, AND 2 PSF FOR ROOFING AND INSULATION) IN GOVERNING ASD OR LRFD LOAD COMBINATION. FOR THE DESIGN OF JOISTS UNDER THIS NET UPLIFT, A 1/3 STRESS INCREASE DUE TO TRANSIENT WIND LOADING IS NOT ALLOWED.
6. BOTTOM CHORD JOIST EXTENSIONS: EXTEND BOTH BOTTOM CHORD MEMBERS OF ALL STEEL ROOF JOISTS ON COLUMN CENTERLINES AS SHOWN. DO NOT WELD BOTTOM CHORD EXTENSION TO STEEL STRUCTURE UNLESS OTHERWISE INDICATED IN THE DETAILS. IF WELDED, DO NOT WELD UNTIL DEAD LOAD IS APPLIED. NO EXTENSIONS ARE REQUIRED AT EXPANSION JOINTS UNLESS REQUIRED FOR CEILING DETAILS.
7. JOIST PROTECTION: JOISTS SHALL BE CLEANED PER SSPC SP-2 HAND TOOL CLEANING OR SP-3 POWER TOOL CLEANING AND SHOP PAINTED WITH ONE COAT OF THE MANUFACTURER'S STANDARD GRAY PRIMER. TOUCH UP SCARRED AREAS WITH THE SAME PAINT AFTER ERECTION.

STEEL DECKING (053100)

1. DECK GOVERNING CRITERIA: THE DESIGN, FABRICATION, AND ERECTION OF METAL DECKING SHALL BE IN ACCORDANCE WITH THE CURRENT EDITION OF THE SDI SPECIFICATIONS AND THE SDI DIAPHRAGM DESIGN MANUAL.
2. DECK ENDS: MAY BE BUTTED OR LAPPED OVER SUPPORTS. LAPS SHALL BE A MINIMUM OF 3"
3. ROOF DECK CONNECTIONS: ROOF DECKING SHALL BE CONNECTED TO THE STRUCTURE AS INDICATED IN THE ROOF DECK SCHEDULE. MAINTAIN OVERALL STRUCTURAL BRACING UNTIL ALL DECKING HAS BEEN INSTALLED.
4. FLOOR DECK CONNECTIONS: FLOOR DECKING SHALL BE CONNECTED TO THE STRUCTURE AS INDICATED IN THE FLOOR DECK SCHEDULE. MAINTAIN OVERALL STRUCTURAL BRACING UNTIL ALL DECKING HAS BEEN INSTALLED.
5. DECK PROTECTION: PAINTED DECKING SHALL BE COVERED WITH A WATERPROOF COVERING DURING SHIPPING AND SHALL BE STORED OFF THE GROUND AND COVERED WITH A WATERPROOF COVERING WHILE ON SITE.
6. FLOOR SLAB-ON-DECK DESIGN: ALL FLOOR SLABS SUPPORTED ON STEEL STRUCTURE AND METAL DECK SHALL HAVE A TOTAL THICKNESS AND REINFORCING AS INDICATED ON PLAN.
7. FLOOR AND ROOF DECK SHALL BE INSTALLED WITH A MINIMUM OF THREE SPANS UNLESS INDICATED OTHERWISE.

COLD-FORMED METAL FRAMING (054000)

1. DESIGN CRITERIA: COLD-FORMED METAL FRAMING SHALL BE INSTALLED PER THE REQUIREMENTS OF AISI NAS.
2. LIGHT GAUGE STEEL STUDS/JOISTS: SEE MATERIAL DATA NOTES
3. REFERENCE PLANS AND SCHEDULES FOR GAUGE AND SPACING OF LIGHT GAUGE STEEL STUDS/JOISTS.
4. LIGHT GAUGE STEEL BOTTOM TRACK AT LOAD BEARING WALLS:
   A. BOTTOM TRACK SHALL BE GALVANIZED
   B. FASTEN TO FOUNDATION AT SHEAR WALLS PER SHEAR WALL SCHEDULE & TYPICAL DETAILS.
   C. FASTEN AT ALL OTHER LOAD BEARING WALLS PER DETAILS INDICATED ON PLAN.
5. FRAMING AT WALL OPENINGS: SEE TYPICAL DETAILS FOR HEAD AND SILL FRAMING AT WALL OPENINGS.
6. FRAMING AT FLOOR/ROOF OPENINGS: PROVIDE DOUBLE HEADERS AND DOUBLE JOISTS EACH SIDE OF ALL OPENINGS IN FLOORS AND ROOFS UNLESS DETAILED OTHERWISE.
7. BLOCKING AND BRIDGING AT STUDS: PROVIDE BLOCKING/BRIDGING AT 4 FT. MAXIMUM CENTERS IN ALL STUD WALLS. PROVIDE SOLID BLOCKING IN TWO END BAYS EACH END AND REPEAT IN TWO BAYS EVERY 8 FT. ON CENTER. BETWEEN SOLID BLOCKING, PROVIDE A CONTINUOUS LIGHT GAUGE STRAP EACH SIDE OF THE STUDS.
8. BLOCKING AND BRIDGING AT JOISTS: PROVIDE SOLID BLOCKING AT ALL JOIST BEARING POINTS. PROVIDE BLOCKING/BRIDGING AT 8 FT. MAXIMUM CENTERS BETWEEN BEARING POINTS. BLOCKING/BRIDGING SHALL INCLUDE SOLID BLOCKING IN TWO END BAYS EACH END AND REPEAT IN TWO BAYS EVERY 8 FT. ON CENTER. BETWEEN SOLID BLOCKING, PROVIDE A CONTINUOUS LIGHT GAUGE STRAP AT THE UNDERSIDE OF THE JOISTS.

DEFERRED SUBMITTALS:

1. STRUCTURAL DELEGATED DESIGNS AND SUBSEQUENT DEFERRED SUBMITTALS ARE FOR ELEMENTS, PARTS, OR PORTIONS OF THE OVERALL STRUCTURAL SYSTEM THAT ARE INDICATED OR REFERRED TO ON THESE DRAWINGS AND THAT ARE CRITICAL TO THE PERFORMANCE OF THE OVERALL STRUCTURAL SYSTEM. DESIGN CRITERIA HAS BEEN PROVIDED FOR THESE ITEMS IN THE STRUCTURAL NOTES, PLANS AND DETAILS.
2. DEFERRED SUBMITTALS SHALL BE COMPLETE PACKAGES AND SHALL BE SUBMITTED FOR REVIEW TO THE ENGINEER OF RECORD (EOR) AND BUILDING OFFICIAL THAT INCLUDE DRAWINGS AND CALCULATIONS FOR ALL DELEGATED DESIGN ITEMS AND THEIR CONNECTIONS (AS APPLICABLE). DEFERRED SUBMITTALS SHALL BE SIGNED AND SEALED BY THE DESIGN PROFESSIONAL RESPONSIBLE FOR THEIR DESIGN.
3. NONE OF THE DEFERED SUBMITTAL ITEMS SHALL BE ERECTED OR INSTALLED UNTIL ALL SUBMITTED DOCUMENTS HAVE BEEN REVIEWED AND APPROVED BY BOTH THE EOR AND THE BUILDING OFFICIAL. IT IS THE CONTRACTOR'S RISK TO HAVE DEFERRED SUBMITTAL ITEMS FABRICATED PRIOR TO REVIEWAL AND APPROVAL BY BOTH THE EOR AND BUILDING OFFICIAL AND ANY UNAPPROVED OR MODIFIED ITEMS DURING THE REVIEW PROCESS ARE NOT AT FAULT OF THE EOR, BUILDING OFFICIAL, OR CLIENT/OWNER.
4. STRUCTURAL DEFFERED SUBMITAL ITEMS REQUIRING A DELEGATED DESIGN INCLUDE:
   a. SPECIAL JOIST LOADING AS INDICATED ON PLANS OR DETAILS
   b. CANOPIES/OVERHANGS

REQUIRED CONTRACTOR SUBMITTALS TO EOR:

THE FOLLOWING LIST OF ITEMS ARE THE MINIMAL LIST OF SUBMITTALS THAT SHALL BE SUBMITTED TO THE ENGINEER OF RECORD FOR REVIEW AND RESPONSE. ADDITIONAL ITEMS MAY BE ADDED TO THE LIST BASED ON THE CONTRACTOR'S DISCRETION. THIS LIST IS NOT FULLY COMPREHENSIVE AND SHALL ONLY BE USED AS A MINIMAL BASIS OF CONSTRUCTION SUBMITTALS. ADDITIONAL SUBMITTALS MAY ALSO BE REQUIRED BY THE AUTHORITY HAVING JURISDICTION.

1. CONCRETE MIX DESIGNS (INCLUDING ADMIXTURE INFOSHEETS)
2. CONCRETE COMPRESSIVE STRENGTHS
3. CONCRETE REINFORCEMENT SHOP DRAWINGS
4. CONCRETE MASONRY UNIT COMPRESSIVE STRENGTHS
5. GROUT AND MORTAR MIX DESIGNS (INCLUDING ADMIXTURE INFOSHEETS)
6. CONCRETE MASONRY UNIT REINFORCING SHOP DRAWINGS (INCLUDING WALL ELEVATIONS)
7. STRUCTURAL STEEL SHOP DRAWINGS AND PIECE TICKETS
8. EMBED AND ANCHOR BOLT SHOP DRAWINGS
9. STEEL JOIST SHOP AND ERECTION DRAWINGS AND SEALED CALCULATIONS

SPECIAL INSPECTIONS (IBC 2018)

SPECIAL INSPECTIONS SHALL BE PROVIDED BY THE OWNER FOR THE WORK IN ACCORDANCE WITH IBC CHAPTER 17. CONTRACTOR SHALL NOTIFY AND ACCOMMODATE THE APPLICABLE INSPECTOR DURING APPROPRIATE PHASES OF THE WORK AS REQUIRED FOR EACH TYPE OF INSPECTION.

<u>STEEL CONSTRUCTION - GENERAL</u>

1. SHOP CUT AND FINISHED SURFACES IN ACCORDANCE WITH SECTION M2 OF AISC 360-16.
2. SHOP HEATING FOR STRAIGHTENING, CAMBERING AND CURVING IN ACCORDANCE WITH SECTION M2.1 OF AISC 360-16.
3. TOLERANCES FOR SHOP FABRICATION IN ACCORDANCE WITH SECTION 6.4 OF AISC 303-16.
4. STEEL DECK IN ACCORDANCE WITH SDI-QA/QC-2017
5. FIELD CUT SURFACES IN ACCORDANCE WITH SECTION M2.2 OF AISC 360-16.
6. FIELD HEATING FOR STRAIGHTENING IN ACCORDANCE WITH SECTION M2.1 OF AISC 360-16.
7. TOLERANCES FOR FIELD ERECTION IN ACCORDANCE WITH SECTION 7.13 OF AISC 303-16.

<u>STEEL INSPECTION DEFINITIONS</u>

O - OBSERVE THESE ITEMS ON A RANDOM BASIS. OPERATIONS NEED NOT BE DELAYED PENDING THESE INSPECTIONS.
P - PERFORM THESE TASKS FOR EACH WELDED JOINT OR MEMBER, EACH BOLTED CONNECTION, OR EACH STEEL ELEMENT.
QC - TO BE INSPECTIONS PROVIDED BY THE FABRICATOR AND ERECTOR
QA - TO BE PROVIDED BY A THIRD PARTY DURING CONSTRUCTION WHEN REQUIRED BY THE AUTHORITY HAVING JURISDICTION (AHJ)

<u>STEEL INSPECTION GENERAL NOTE</u>

THE ITEMS DESIGNATED BY THE 'QC' CAN BE OMITTED WHEN USING AN AISC CERTIFIED FABRICATOR WITH THE WRITTEN NOTICE OF APPROVAL BY THE AHJ. THE CONTRACTOR SHALL BE THE RESPONSIBLE PARTY FOR CONTACTING THE AHJ FOR SUCH PERMISSION.

<u>STEEL CONSTRUCTIION - PRIOR TO WELDING</u>

1. WELDER QUALIFICATION RECORDS AND CONTINUITY RECORDS **(QC - P; QA - O)**
2. WELDING PROCEDURE SPECIFICATIONS (WPSs) AVAILABLE. **(QC - P; QA - P)**
3. MANUFACTURER CERTIFICATIONS FOR WELDING CONSUMABLES AVAILABLE. **(QC - P; QA - P)**
4. MATERIAL IDENTIFICATION (TYPE/GRADE). **(QC - O; QA - O)**
5. WELDER IDENTIFICATION SYSTEM. **(QC - O; QA - O)**
6. FIT-UP GROOVE WELDS (INCLUDING JOINT GEOMETRY). **(QC - O; QA - O)**
   A. JOINT PREPARATION.
   B. DIMENSIONS (ALIGNMENT, ROOT OPENING, ROOT FACE, BEVEL).
   C. CLEANLINESS (CONDITION OF STEEL SURFACES).
   D. TACKING (TACK WELD QUALITY AND LOCATION).
   E. BACKING TYPE AND FIT (IF APPLICABLE).
7. FIT-UP OF CJP GROOVE WELDS OF HSS T-, Y- AND K-JOINTS WITHOUT BACKING (INCLUDING JOINT GEOMETRY) **(QC - P; QA - O)**
   A. JOINT PREPARATION.
   B. DIMENSIONS (ALIGNMENT, ROOT OPENING, ROOT FACE, BEVEL).
   C. CLEANLINESS (CONDITION OF STEEL SURFACES).
   D. TACKING (TACK WELD QUALITY AND LOCATION).
8. CONFIGURATION AND FINISH OF ACCESS HOLES. **(QC - O; QA - O)**
9. FIT-UP FILLET WELDS. **(QC - O; QA - O)**
   A. DIMENSIONS (ALIGNMENT, GAPS AT ROOT).
   B. CLEANLINESS (CONDITION OF STEEL SURFACES).
   C. TACKING (TACK WELD QUALITY AND LOCATION).
10. CHECK WELDING EQUIPMENT. **(QC - O; QA - N/A)**

<u>STEEL CONSTRUCTION - DURING WELDING</u>

1. USE OF QUALIFIED WELDERS. **(QC - O; QA - O)**
2. CONTROL AND HANDLING OF WELDING CONSUMABLES. **(QC - O; QA - O)**
   A. PACKAGING.
   B. EXPOSURE CONTROL.
3. NO WELDING OVER CRACKED TACK WELDS. **(QC - O; QA - O)**
4. ENVIRONMENTAL CONDITIONS.
   A. WIND SPEED WITHIN LIMITS.
   B. PRECIPITATION AND TEMPERATURE.
5. WPS FOLLOWED. **(QC - O; QA - O)**
   A. SETTINGS ON WELDING EQUIPMENT.
   B. TRAVEL SPEED.
   C. SELECTING WELDING MATERIALS.
   D. SHIELDING GAS TYPE/FLOW RATE.
   E. PREHEAT APPLIED.
   F. INTERPASS TEMPERATURE MAINTAINED (MIN./MAX.).
   G. PROPER POSITION (F, V, H, OH).
6. WELDING TECHNIQUES. **(QC - O; QA - O)**
   A. INTERPASS AND FINAL CLEANING.
   B. EACH PASS WITH PROFILE LIMITATIONS.
   C. EACH PASS MEETS QUALITY REQUIREMENTS.
7. PLACEMENT AND INSTALLATION OF STEEL HEADED STUD ANCHORS **(QC - P; QA - P)**

<u>STEEL CONSTRUCTION - AFTER WELDING</u>

1. WELDS CLEANED. **(QC - O; QA - O)**
2. SIZE, LENGTH AND LOCATION OF WELDS. **(QC - P; QA - P)**
3. WELD MEET VISUAL ACCEPTANCE CRITERIA. **(QC - P; QA - P)**
   A. CRACK PROHIBITION.
   B. WELD/BASE-METAL FUSION.
   C. CRATER CROSS SECTION.
   D. WELD PROFILES.
   E. WELD SIZE.
   F. UNDERCUT.
   G. POROSITY.
4. ARC STRIKES. **(QC - P; QA - P)**
5. K-AREA. **(QC - P; QA - P)**
6. WELD ACCESS HOLES IN ROLLED HEAVY SHAPES AND BUILT-UP HEAVY SHAPES. **(QC - P; QA - P)**
7. BACKING REMOVED AND WELD TABS REMOVED (IF REQUIRED).
8. REPAIR ACTIVITIES. **(QC - P; QA - P)**
9. DOCUMENT ACCEPTANCE OR REJECTION OF WELDED JOINT OR MEMBER. **(QC - P; QA - P)**
10. NO PROHIBITED WELDS HAVE BEEN ADDED WITHOUT THE APPROVAL OF THE EOR. **(QC - O; QA - O)**

<u>STEEL CONSTRUCTION - PRIOR TO BOLTING</u>

1. MANUFACTURER'S CERTIFICATIONS AVAILABLE FOR FASTENER MATERIALS. **(QC - O; QA - P)**
2. FASTENERS MARKED IN ACCORDANCE WITH ASTM REQUIREMENTS. **(QC - O; QA - O)**
3. CORRECT FASTENERS SELECTED FOR THE JOINT DETAIL (GRADE, TYPE, BOLT LENGTH IF THREADS ARE TO BE EXCLUDED FROM SHEAR PLANE). **(QC - O; QA - O)**
4. CORRECT BOLTING PROCEDURE SELECTOR FOR JOINT DETAIL. **(QC - O; QA - O)**
5. CONNECTING ELEMENTS, INCLUDING THE APPROPRIATE FAYING SURFACE CONDITION AND HOLE PREPARATION, IF SPECIFIED, MEET APPLICABLE REQUIREMENTS. **(QC - O; QA - O)**
6. PRE-INSTALLATION VERIFICATION TESTING BY INSTALLATION PERSONNEL OBSERVED AND DOCUMENTED FOR FASTENER ASSEMBLIES AND METHODS USED. **(QC - P; QA - O)**
7. PROTECTED STORAGE PROVIDED FOR BOLTS, NUTS, WASHERS AND OTHER FASTENER COMPONENTS. **(QC - O; QA - O)**

<u>STEEL CONSTRUCTION - DURING BOLTING</u>

1. FASTENER ASSEMBLIES PLACED IN ALL HOLES AND WASHERS ARE POSITIONED AS REQUIRED. **(QC - O; QA - O)**
2. JOINT BROUGHT TO THE SNUG-TIGHT CONDITION PRIOR TO THE PRETENSIONING OPERATION. **(QC - O; QA - O)**
3. FASTENER COMPONENT NOT TURNED BY THE WRENCH PREVENTED FROM ROTATING. **(QC - O; QA - O)**
4. FASTENERS ARE PRETENSIONED IN ACCORDANCE WITH THE RCSC SPECIFICATION, PROGRESSING SYSTEMATICALLY FROM THE MOST RIGID POINT TOWARD THE FREE EDGES. **(QC - O; QA - O)**

<u>STEEL CONSTRUCTION - AFTER BOLTING</u>

1. DOCUMENT ACCEPTANCE OR REJECTION OF BOLTED CONNECTIONS. **(QC - P; QA - P)**

<u>COLD-FORMED STEEL DECK</u>

1. SPECIAL INSPECTIONS AND QUALIFICATION OF WELDING SPECIAL INSPECTORS FOR COLD-FORMED STEEL FLOOR AND ROOF DECK SHALL BE IN ACCORDANCE WITH THE QUALITY ASSURANCE INSPECTION REQUIREMENTS OF SDI-QA/QC-2017.

<u>OPEN-WEB STEEL JOISTS AND JOIST GIRDERS</u>

1. INSTALLATION OF OPEN-WEB STEEL JOISTS AND JOIST GIRDERS.
   A. END CONNECTIONS - WELDING OR BOLTED. **(PERIODIC)**
   B. BRIDGING - HORIZONTAL OR DIAGONAL.
      1. STANDARD BRIDGING PER SJI SPECIFICATIONS LISTED IN SECTION 2207.1. **(PERIODIC)**
      2. BRIDGING THAT DIFFERS FROM THE SJI SPECIFICATIONS LISTED IN SECTION 2207.1. **(PERIODIC)**

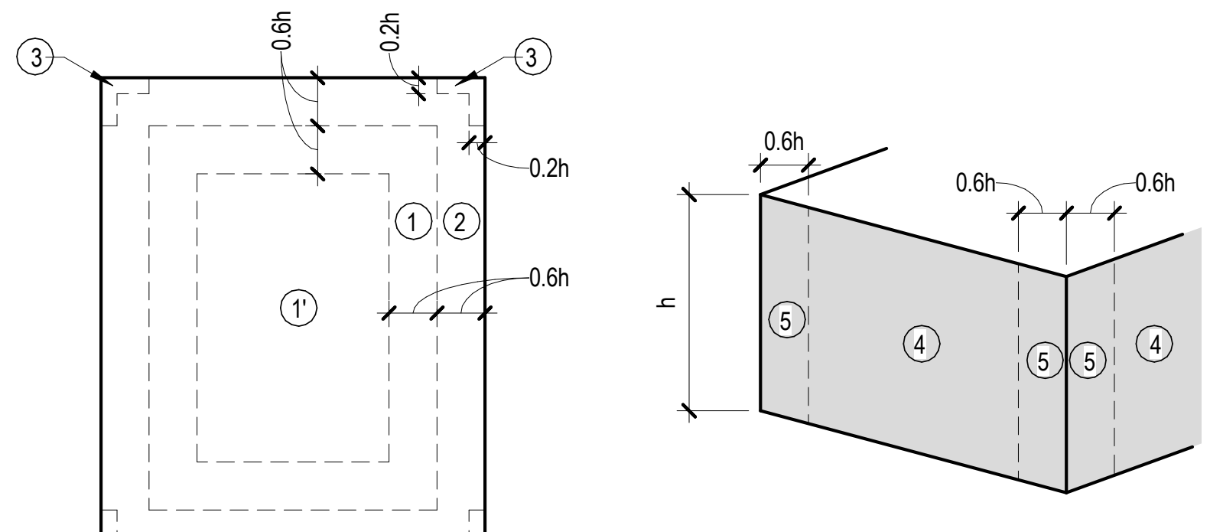

FLAT ROOFS θ<3°
GABLE ROOFS θ<7°HIP
ROOFS θ<7°

SPECIAL INSPECTIONS CONTINUED (IBC 2018)

<u>CONCRETE CONSTRUCTION</u>

1. INSPECTION OF REINFORCEMENT AND VERIFY PLACEMENT. **(PERIODIC)**
2. REINFORCING BAR WELDING:
   A. VERIFY WELDABILITY OF REINFORCING BARS OTHER THAN ASTM A706. **(PERIODIC)**
   B. INSPECT SINGLE-PASS FIILLET WELDS, MAXIMUM 5/16". **(PERIODIC)**
   C. INSPECT ALL OTHER WELDS. **(CONTINUOUS)**
3. INSPECT ANCHORS CAST IN CONCRETE. **(PERIODIC)**
4. INSPECT ANCHORS POST-INSTALLED IN HARDENED CONCRETE MEMBERS.
   A. ADHESIVE ANCHORS INSTALLED IN HORIZONTALLY OR UPWARDLY INCLINED ORIENTATIONS TO RESIST SUSTAINED TENSION LOADS. **(CONTINUOUS)**
   B. MECHANICAL ANCHORS AND ADHESIVE ANCHORS NOT DEFINED IN 4.A. **(PERIODIC)**
5. VERIFY USE OF REQUIRED DESIGN MIX. **(PERIODIC)**
6. PRIOR TO CONCRETE PLACEMENT, FABRICATE SPECIMENS FOR STRENGTH TESTS, PERFORM SLUMP AND AIR CONTENT TESTS, AND DETERMINE THE TEMPERATURE OF THE CONCRETE. **(CONTINUOUS)**
7. VERIFY MAINTENANCE OF SPECIFIED CURING TEMPERATURE AND TECHNIQUES. **(PERIODIC)**
8. INSPECT ERECTION OF PRECAST CONCRETE MEMBERS. **(PERIODIC)**
9. INSPECT FORMWORK FOR SHAPE, LOCATION AND DIMENSIONS OF THE CONCRETE MEMBER BEING FORMED. **(PERIODIC)**

<u>MASONRY CONSTRUCTION - LEVEL 2</u>

EMPIRICALLY DESIGNED MASONRY, MASONRY VENEER, GLASS UNIT MASONRY
- RISK CATEGORY IV
ALL OTHER MASONRY - RISK CATEGORY I, II OR III

TEST: VERIFICATION OF SLUMP FLOW AND VISUAL STABILITY INDEX (VSI) AS DELIVERED TO THE PROJECT SITE IN ACCORDANCE WITH SPECIFICATION ARTICLE 1.5 B.1.b.3 FOR SELF-CONSOLIDATING GROUT.

TEST: VERIFICATION OF f'm IN ACCORDANCE WITH SPECIFICATION ARTICLE 1.4 B PRIOR TO CONSTRUCTION, EXCEPT WHERE SPECIFICALLY EXEMPTED BY THIS CODE.

1. VERIFY COMPLIANCE WITH THE APPROVED SUBMITTALS. **(PERIODIC)**
2. AS MASONRY CONSTRUCTION BEGINS, VERIFY THAT THE FOLLOWING ARE IN COMPLIANCE:
   A. PROPORTIONS OF SITE-PREPARED MORTAR. **(PERIODIC)**
   B. CONSTRUCTION OF MORTAR JOINTS. **(PERIODIC)**
   C. LOCATION OF REINFORCEMENT AND CONNECTORS. **(PERIODIC)**
3. PRIOR TO GROUTING, VERIFY THAT THE FOLLOWING ARE IN COMPLIANCE:
   A. GROUT SPACE. **(PERIODIC)**
   B. GRADE, TYPE, AND SIZE OF REINFORCEMENT AND ANCHOR BOLTS. **(PERIODIC)**
   C. PLACEMENT OF REINFORCEMENT AND CONNECTORS. **(PERIODIC)**
   D. PROPORTIONS OF SITE-PREPARED GROUT. **(PERIODIC)**
   E. CONSTRUCTION OF MORTAR JOINTS. **(PERIODIC)**
4. VERIFY DURING CONSTRUCTION:
   A. SIZE AND LOCATION OF STRUCTURAL ELEMENTS. **(PERIODIC)**
   B. TYPE, SIZE AND LOCATION OF ANCHORS, INCLUDING OTHER DETAILS OF ANCHORAGE OF MASONRY TO STRUCTURAL MEMBERS, FRAMES OR OTHER CONSTRUCTION. **(PERIODIC)**
   C. WELDING REINFORCEMENT. **(CONTINUOUS)**
   D. PREPARATION, CONSTRUCTION, AND PROTECTION OF MASONRY DURING COLD WEATHER (TEMPERATURE BELOW 40 DEGREES FAHRENHEIT (4.4 DEGREES CELSIUS)) OR HOT WEATHER (TEMPERATURE ABOVE 90 DEGREES FAHRENHEIT (32.2 DEGREES CELSIUS)). **(PERIODIC)**
   E. PLACEMENT OF GROUT IS IN COMPLIANCE. **(CONTINUOUS)**
5. OBSERVE PREPARATION OF GROUT SPECIMENTS, MORTAR SPECIMENS, AND/OR PRISMS. **(PERIODIC)**

<u>SOILS</u>

1. VERIFY MATERIALS BELOW SHALLOW FOOTINGS ARE ADEQUATE TO ACHIEVE THE DESIGN BEARING CAPACITY. **(PERIODIC)**
2. VERIFY EXCAVATIONS ARE EXTENDED TO PROPER DEPTH AND HAVE REACHED PROPER MATERIAL. **(PERIODIC)**
3. PERFORM CLASSIFICATION AND TESTING OF COMPACTED FILL MATERIALS. **(PERIODIC)**
4. VERIFY USE OF PROPER MATERIALS, DENSITIES AND LIFT THICKNESSES DURING PLACEMENT AND COMPACTION OF COMPACTED FILL. **(CONTINUOUS)**
5. PRIOR TO PLACEMENT OF COMPACTED FILL, OBSERVE SUBGRADE AND VERIFY THAT SITE HAS BEEN PREPARED PROPERLY. **(PERIODIC)**

DESIGNED:	JMP
DRAWN:	JMP
CHECKED:	KMW

ISSUE DATE: 10/18/2024
REVISIONS:

No.:	DATE:	BY:	DESCRIPTION:

THIS DRAWING IS BEING MADE AVAILABLE BY SCHEMMER FOR USE ON THIS PROJECT IN ACCORDANCE WITH SCHEMMER'S AGREEMENT FOR PROFESSIONAL SERVICES. SCHEMMER ASSUMES NO RESPONSIBILITY OR LIABILITY FOR ANY USE OF THIS DRAWING OR ANY PART THEREOF EXCEPT IN ACCORDANCE WITH THE TERMS OF THE ABOVE AGREEMENT.

JOSHUA M. PEARCE
E-17798
10/18/2024

SCHEMMER
Design with Purpose. Build with Confidence.
1044 North 115th Street, Suite 300, Omaha, Nebraska 68154 | 402.493.4800
CA0666

LANOHA DEVELOPMENT
HAWTHORNE COURT MULTI-TENANT BUILDING

17662 WELCH PLAZA
OMAHA, NE 68154

STRUCTURAL NOTES

PROJECT NO.: 010347.001

S 01

C:\Users\jpearce\Documents\Revit_temp\010347001-STRUC_R23_jpearceJK43W.rvt
10/18/2024 12:57:35 PM

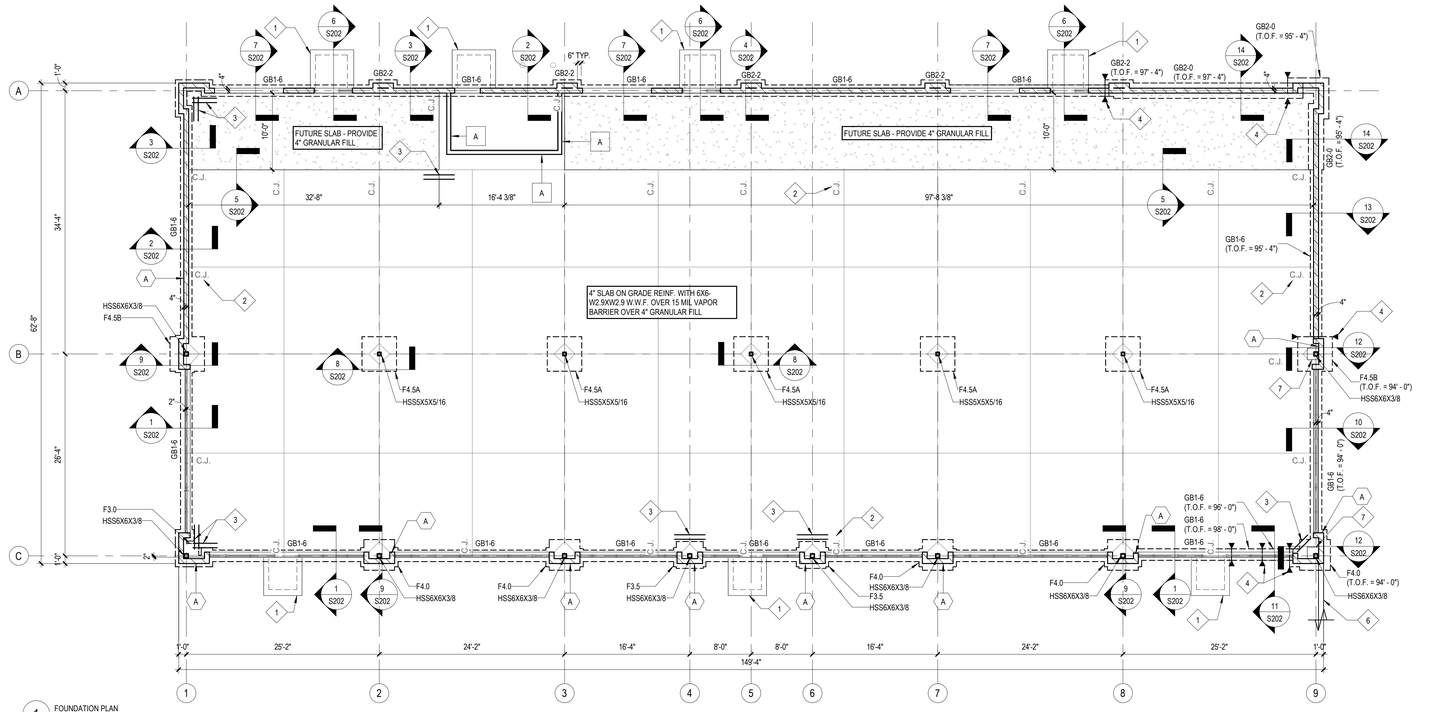

1 FOUNDATION PLAN
SCALE: 1/8" = 1'-0"

FOUNDATION PLAN NOTES:

A. REFERENCE SHEET S01 FOR STRUCTURAL NOTES AND SHEET S00 FOR SCHEDULES.

B. REFERENCE SHEET S201 FOR TYPICAL FOUNDATION DETAILS NOT NECESSARILY INDICATED ON PLAN.

C. VERIFY ALL DIMENSIONS WITH ARCHITECTURAL DRAWINGS.

D. ARCHITECTURAL ELEVATION 100'-0" IS EQUAL TO CIVIL ELEVATION 1234.8'.

E. TOP OF FOOTING (T.O.F.) ELEVATION IS 99'-4", TYPICAL U.N.O.

F. FINISHED FLOOR ELEVATION (F.F.E.) IS 100'-0", TYPICAL U.N.O.

G. GRADE BEAMS ARE REQUIRED AT ALL EXTERIOR WALLS. BOTTOM OF GRADE BEAM SHALL HAVE A MINIMUM DEPTH OF 42" BELOW EXTERIOR GRADE.

H. CONTINUOUS FOOTINGS ARE REQUIRED AT ALL INTERIOR LOAD BEARING WALLS.

I. PAD FOOTINGS ARE REQUIRED BELOW ALL STRUCTURAL COLUMNS.

J. STRUCTURAL STOOPS ARE REQUIRED AT ALL EXTERIOR SWING DOORS. SEE TYPICAL DETAIL ON SHEET S201.

REF. NOTES (X):

1 STRUCTURAL STOOP - SEE SHEET S201 FOR TYPICAL DETAIL. REFERENCE ARCHITECTURAL DRAWINGS FOR STOOP DIMENSIONS.

2 'C.J.' INDICATES CONTROL JOINT - SEE TYPICAL DETAIL ON SHEET S201 AND STRUCTURAL NOTES FOR MORE INFORMATION.

3 PROVIDE (2) #5 X 3'-0" LONG BARS @ 4" O.C. CENTERED IN SLAB AT ALL RE-ENTRANT CORNERS WITHOUT CONTROL JOINTS (CJ) AND AT ENDS OF CONTROL JOINTS TERMINATED WITHIN SLAB – TYPICAL.

4 SYMBOL INDICATES FOOTING STEP - SEE TYPICAL DETAIL ON S201.

6 RETAINING WALL - SEE CIVIL DRAWINGS

7 1'-6"X1'-6" CONC PIER. #3 TIES (14 X 14) AT 12" O.C. PROVIDE 3 TIES WITHIN THE TOP 5" OF PIER AND (4) - #6 VERTICAL DOWELS.

DESIGNED: JMP
DRAWN: JMP
CHECKED: KMW

ISSUE DATE: 10/18/2024
REVISIONS:

No.:	DATE:	BY:	DESCRIPTION:

PROFESSIONAL STRUCTURAL ENGINEER
JOSHUA M. PEARCE
E-17798
10/18/2024
STATE OF NEBRASKA

SCHEMMER
Design with Purpose. Build with Confidence.
1044 North 115th Street, Suite 300, Omaha, Nebraska 68154 | 402.493.4800
CA0666

LANOHA DEVELOPMENT
HAWTHORNE COURT MULTI-TENANT BUILDING
17662 WELCH PLAZA
OMAHA, NE 68154
FOUNDATION PLAN

PROJECT NO.: 010347.001

S101

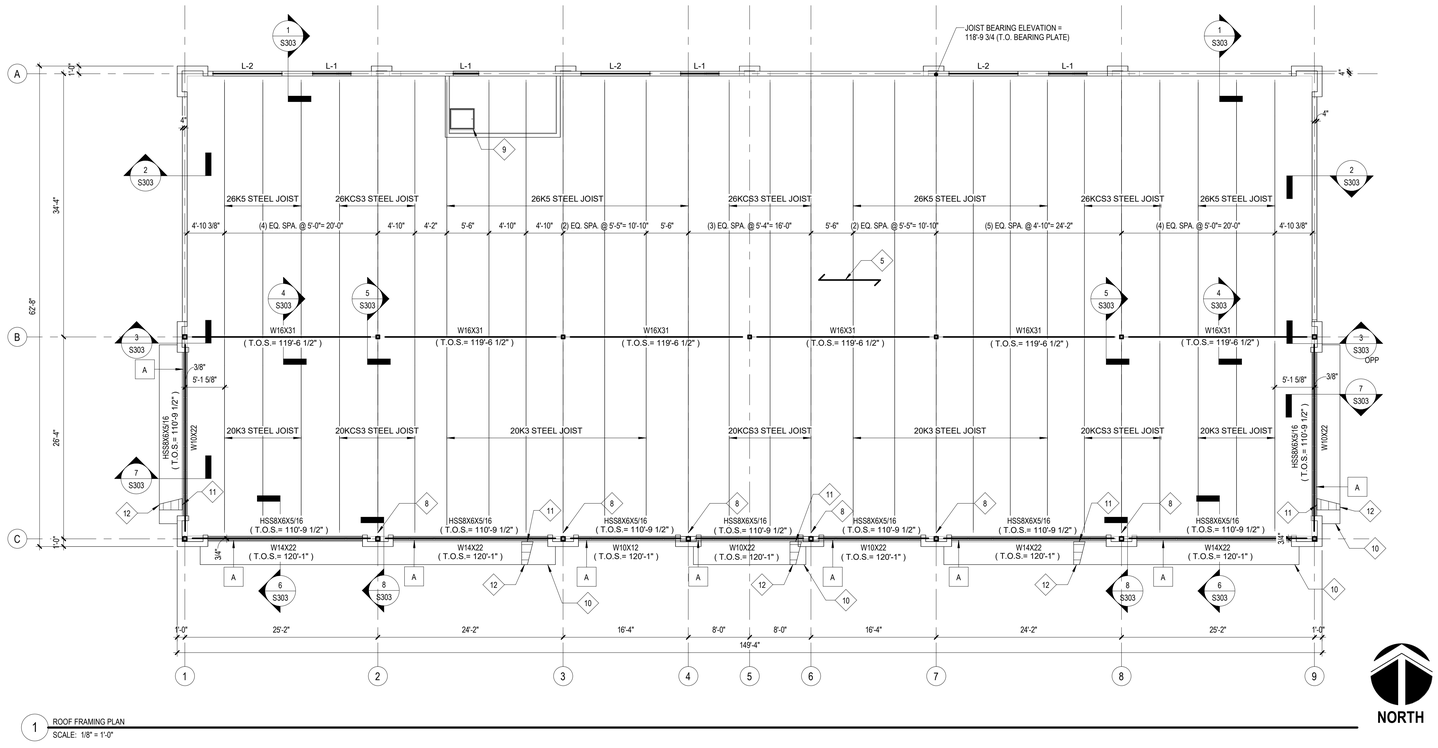

1 ROOF FRAMING PLAN
SCALE: 1/8" = 1'-0"

ROOF FRAMING PLAN NOTES:

A. REFERENCE SHEET S01 FOR STRUCTURAL NOTES AND SHEET S00 FOR SCHEDULES.

B. REFERENCE SHEET S301 & S302 FOR TYPICAL FRAMING DETAILS NOT NECESSARILY INDICATED ON PLAN.

C. VERIFY ALL DIMENSIONS WITH ARCHITECTURAL DRAWINGS.

D. SEE PLAN FOR TOP OF STEEL (T.O.S.) ELEVATION.

E. DEFLECTION CLIPS ARE REQUIRED FOR ALL NON-LOADBEARING METAL STUD WALLS CONNECTED TO STRUCTURE ABOVE.

REF. NOTES (X):

5	1 1/2" 'B' 22 GA. METAL ROOF DECK. SEE METAL DECK SCHEDULE ON S00 FOR MORE INFORMATION.
8	JOIST SUPPLIER DESIGN JOIST TOP CHORD FOR 5000# AXIAL LOAD DESIGN JOIST SEAT TO TRANSFER AXIAL LOAD (ULTIMATE LEVEL) TYPICAL AT ALL JOIST ALIGNED WITH COLUMNS ALONG GRID C
9	ROOF HATCH - SEE ARCH. JOIST SUPPLIER COORDINATE JOIST BRIDGING WITH ROOF HATCH. SEE TYPICAL ROOF OPENING DETAIL S302
10	PRE-MANUFACTURED CANOPY - SEE ARCH. SEE PLAN FOR SNOW DRIFT LOAD TO CANOPY
11	69.5 PSF SNOW DRIFT AT PEAK OF DRIFT (INCLUDES BALANCE FLAT ROOF SNOW LOAD 17.5 PSF)
12	57 PSF SNOW DRIFT AT BASE OF DRIFT (INCLUDES BALANCE FLAT ROOF SNOW LOAD 17.5 PSF)

ISSUE DATE: 10/18/2024
REVISIONS:

No.:	DATE:	BY:	DESCRIPTION:

DESIGNED: JMP
DRAWN: JMP
CHECKED: KMW

PROFESSIONAL STRUCTURAL ENGINEER
JOSHUA M. PEARCE
E-17798
10/18/2024
STATE OF NEBRASKA

SCHEMMER
Design with Purpose. Build with Confidence.
1044 North 115th Street, Suite 300, Omaha, Nebraska 68154 | 402.493.4800
CA0666

LANOHA DEVELOPMENT
HAWTHORNE COURT MULTI-TENANT BUILDING
17662 WELCH PLAZA
OMAHA, NE 68154

ROOF FRAMING PLAN

PROJECT NO.: 010347.001

S102

C:\Users\jpearce\Documents\Revit_temp\010347001-STRUC_R23_jpearce_KKSW.rvt
10/18/2024 12:37:39 PM

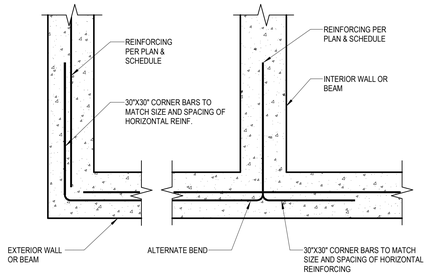

PLAN VIEW

THIS DETAIL APPLICABLE TO:
1. ALL PERIMETER FOUNDATION GRADE WALLS
2. ALL PERIMETER FOUNDATION GRADE BEAMS
3. ALL CONCRETE WALLS

1 TYPICAL CONCRETE WALL CORNER REINFORCING
SCALE: 3/4" = 1'-0"

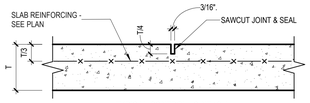

TYPICAL CONTROL JOINT (C.J.)

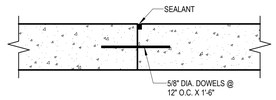

TYPICAL CONSTRUCTION JOINT

NOTES:
1. ALL FLOOR SLABS SHALL BE PLACED IN PAVING LANE PATTERN. A MAXIMUM JOINT SPACING OF 12'-0" U.N.O. AND A MAXIMUM SLAB PANEL ASPECT RATIO (LENGTH/WIDTH) OF 1.5 SHALL BE OBSERVED.
2. ALL JOINTS TERMINATING A POUR SHALL BE CONSTRUCTION JOINTS.
3. TIME SAW CUTTING OPERATION TO PRECLUDE SHRINKAGE, CRACKING, AND DISLODGING OF AGGREGATE.

2 TYPICAL CONCRETE SLAB JOINT DETAILS
SCALE: 3/4" = 1'-0"

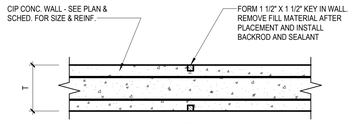

TYPICAL CONTROL JOINT (C.J.)

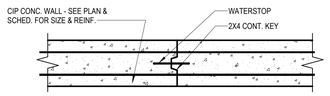

TYPICAL CONSTRUCTION JOINT

NOTES:
- MAXIMUM SPACING OF CONTROL JOINTS SHALL NOT EXCEED 30'-0" U.N.O.
- CONSTRUCTION JOINT TO BE LOCATED A MINIMUM OF 2'-0" FROM ANY COLUMN CENTERLINE. DO NOT ALIGN WALL C.J. WITH C.J. IN SUPPORTING MEMBER OF FLOOR/ROOF STRUCTURE.

3 TYPICAL CONCRETE WALL JOINT DETAILS
SCALE: 3/4" = 1'-0"

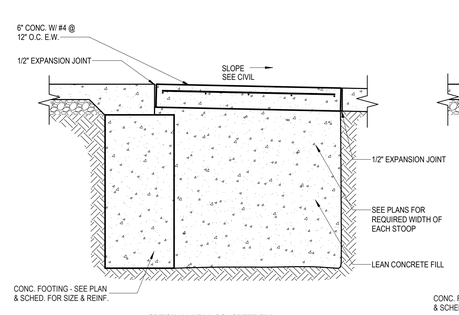

OPTION 'A': LEAN CONCRETE FILL

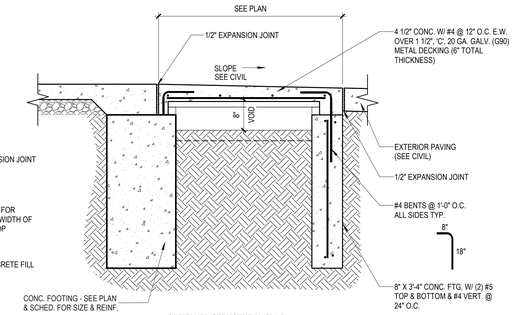

OPTION 'B': STRUCTURAL SLAB

4 TYPICAL CONCRETE STOOP DETAILS
SCALE: 3/4" = 1'-0"

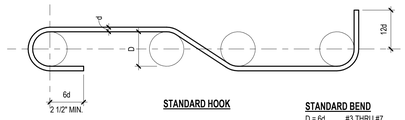

STANDARD HOOK

STANDARD BEND
D = 6d #3 THRU #7
D = 8d #8 THRU #9
D = 10d #10 THRU #11

d = BAR DIAMETER

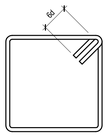

TYPICAL CLOSED TIE

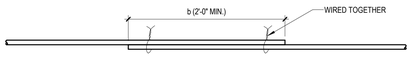

TYPICAL LAP SPLICE

TENSION BAR LAP LENGTH (b)		
(FOR LENGTH b - SEE REINF. BAR DETAIL AND KEY NOTES)		
BAR SIZE	BARS SPACED > $2d_b$	BARS SPACED < $2d_b$ (OTHER)
3	28"	42"
4	37"	56"
5	46"	70"
6	56"	83"
7	81"	122"
8	93"	139"
9	105"	157"
10	118"	176"
11	131"	196"

SPLICE LENGTH IS FOR TYPE B SPLICES PER ACI 318.
BARS ARE ASSUMED TO BE TOP BARS & NOT EPOXY COATED.
f'_c = 3,000 PSI (NORMAL WEIGHT) BAR COVER > d_b
f_y = 60,000 PSI d_b = BAR DIAMETER

TABLE APPLIES TO CIP CONCRETE

TENSION BAR LAP LENGTH (b)		
(FOR LENGTH b - SEE REINF. BAR DETAIL AND KEY NOTES)		
BAR SIZE	ONE BAR IN CELL	TWO BARS IN CELL
3	15"	15"
4	20"	24"
5	25"	38"
6	43"	74"
7	60"	104"
8	110"	193"
9	110"	255"
10	NOT PERMITTED	NOT PERMITTED
11	NOT PERMITTED	NOT PERMITTED

LAP LENGTHS ARE BASED ON 8" NOMINAL CMU, TYPICAL. #9 BARS ARE NOT PERMITTED IN CMU WITH A NOMINAL WIDTH OF 8" OR LESS. #9 BAR LAP LENGTH IS BASED ON 10" NOMINAL CMU.
f'_m = 2,000 PSI f_y = 60,000 PSI

TABLE APPLIES TO GROUTED CMU

5 TYPICAL REINFORCING DETAILS
SCALE: 3/4" = 1'-0"

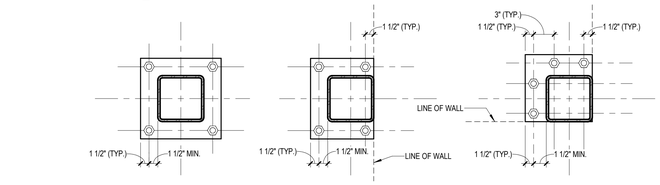

TYPICAL BASE PLATE **EDGE BASE PLATE** **CORNER BASE PLATE**

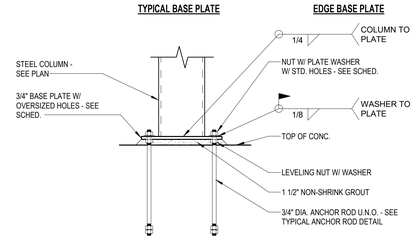

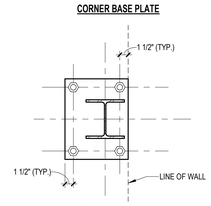

EDGE BASE PLATE

6 TYPICAL BASE PLATE DETAIL
SCALE: 3/4" = 1'-0"

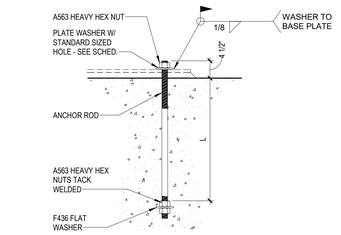

DIA. (IN.)	MIN. L (IN.)	BASE PLATE HOLE Ø (IN.)	PLATE WASHER THICKNESS (IN.)	PLATE WASHER SIZE (IN.)
3/4	8	1 5/16	1/4	2
7/8	10	1 9/16	5/16	2 1/2
1	12	1 7/8	3/8	3
1 1/8	14	2	1/2	3 1/2
1 1/4	16	2 1/8	1/2	3 1/2
1 3/8	18	2 1/4	1/2	4
1 1/2	20	2 3/8	1/2	4

NOTE:
- PROVIDE ANCHOR AND PLATE DIMENSIONS AS TYPICAL, U.N.O.
- REFER TO TABLE 14-2 IN THE AISC STEEL CONSTRUCTION MANUAL

7 TYPICAL ANCHOR ROD DETAIL
SCALE: 3/4" = 1'-0"

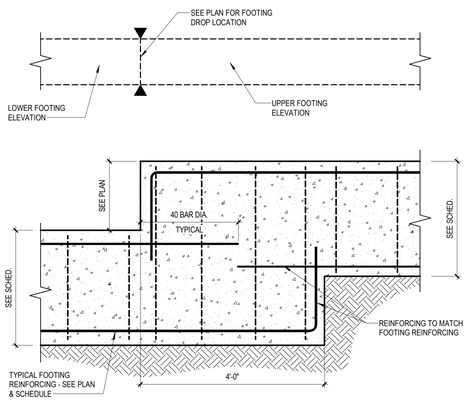

8 TYPICAL GRADE BEAM STEP DETAIL
SCALE: 3/4" = 1'-0"

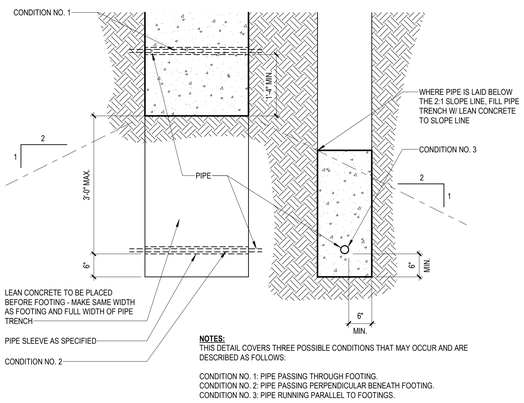

NOTES:
THIS DETAIL COVERS THREE POSSIBLE CONDITIONS THAT MAY OCCUR AND ARE DESCRIBED AS FOLLOWS:

CONDITION NO. 1: PIPE PASSING THROUGH FOOTING.
CONDITION NO. 2: PIPE PASSING PERPENDICULAR BENEATH FOOTING.
CONDITION NO. 3: PIPE RUNNING PARALLEL TO FOOTINGS.

9 TYPICAL CONCRETE FOOTING AT ADJACENT UTILITIES
SCALE: 3/4" = 1'-0"

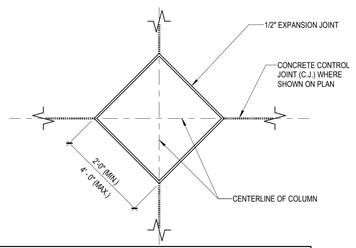

NOTES:
1. SEE TYPICAL DETAIL THIS SHEET FOR CONTROL JOINT REQUIREMENTS.
2. FOR CLARITY COLUMN OMITTED.
3. FOR CONFIGURATION OF SPECIFIC CLOSURE POURS, SEE PLAN.

10 TYPICAL CONCRETE CLOSURE POUR DETAIL
SCALE: 3/4" = 1'-0"

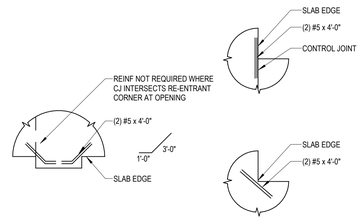

11 TYPICAL SLAB CORNER AND DOOR REINF
SCALE: 3/4" = 1'-0"

No.:	DATE:	BY:	DESCRIPTION:

ISSUE DATE: 10/18/2024
REVISIONS:

DESIGNED: JMP
DRAWN: JMP
CHECKED: KMW

PROFESSIONAL STRUCTURAL ENGINEER
JOSHUA M. PEARCE
E-17798
10/18/2024
STATE OF NEBRASKA

SCHEMMER
Design with Purpose. Build with Confidence.
1044 North 115th Street, Suite 300, Omaha, Nebraska 68154 | 402.493.4800
CA0666

LANOHA DEVELOPMENT
HAWTHORNE COURT MULTI-TENANT BUILDING
17662 WELCH PLAZA
OMAHA, NE 68154

TYPICAL FOUNDATION DETAILS

PROJECT NO.: 010347.001

S201

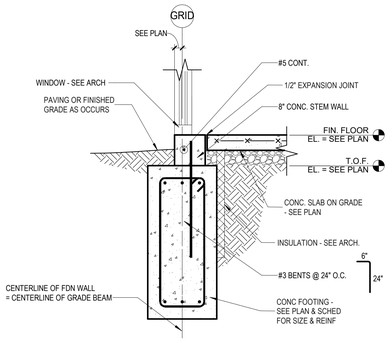

1 WINDOW AT STEM WALL ON GRADE BEAM
SCALE: 3/4" = 1'-0"

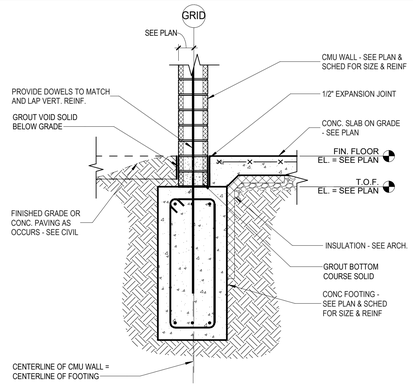

2 EXTERIOR MASONRY WALL AT CONCRETE GRADE BEAM
SCALE: 3/4" = 1'-0"

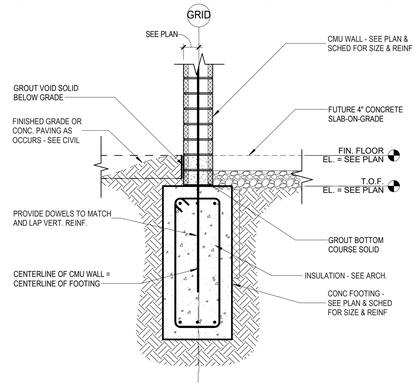

3 EXTERIOR MASONRY WALL AT CONCRETE GRADE BEAM - NO SLAB
SCALE: 3/4" = 1'-0"

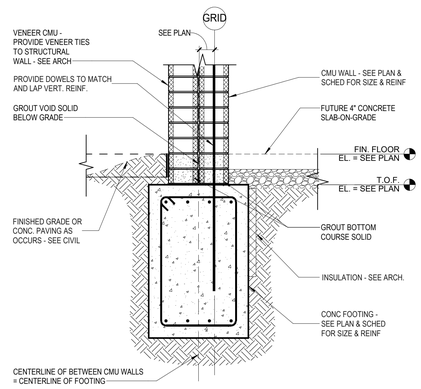

4 EXTERIOR MASONRY WALL AT CONCRETE GRADE BEAM - NO SLAB WITH VENEER CMU
SCALE: 3/4" = 1'-0"

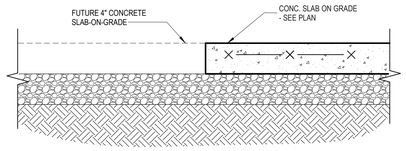

5 SLAB ON GRADE AT FUTURE SLAB
SCALE: 1 1/2" = 1'-0"

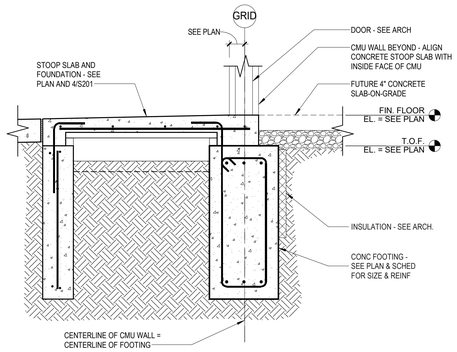

6 STOOP AT EXTERIOR CMU WALL - NO SLAB
SCALE: 3/4" = 1'-0"

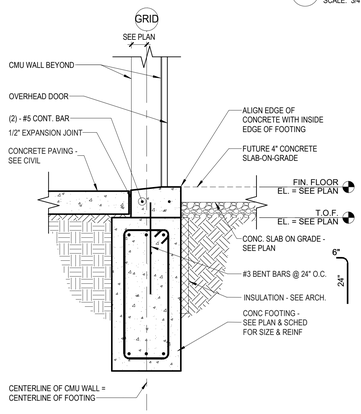

7 SECTION AT O.H. DOOR
SCALE: 3/4" = 1'-0"

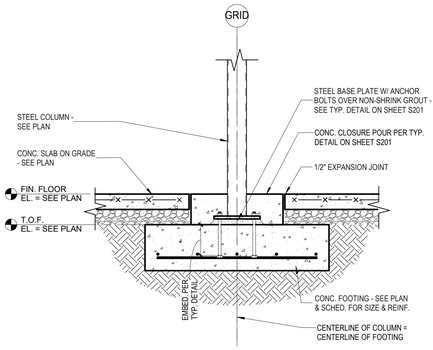

8 STEEL COLUMN AT CONCRETE PAD FOOTING
SCALE: 3/4" = 1'-0"

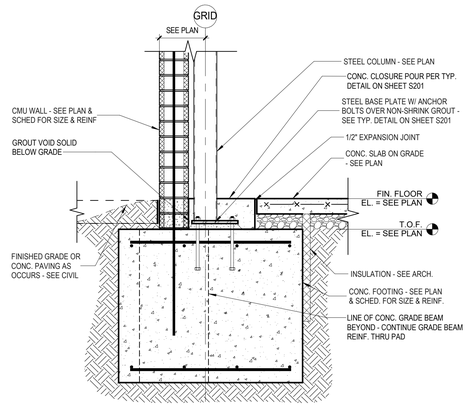

9 STEEL COLUMN AT EXTERIOR MASONRY WALL ON CONCRETE GRADE BEAM
SCALE: 3/4" = 1'-0"

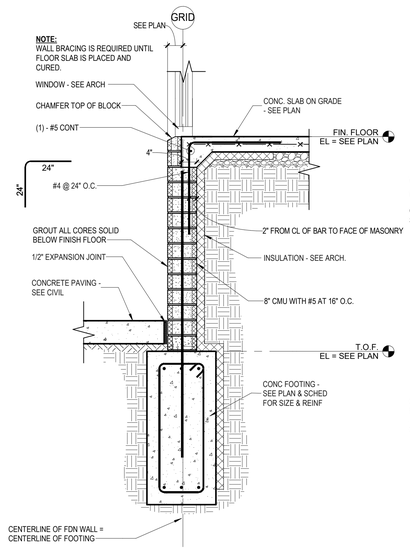

10 WINDOW ON CIP WITH LOW FOOTING
SCALE: 3/4" = 1'-0"

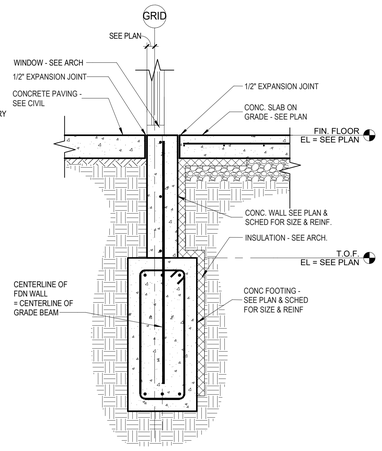

11 WINDOW ON CIP AT LOW GRADE AT EXTERIOR
SCALE: 3/4" = 1'-0"

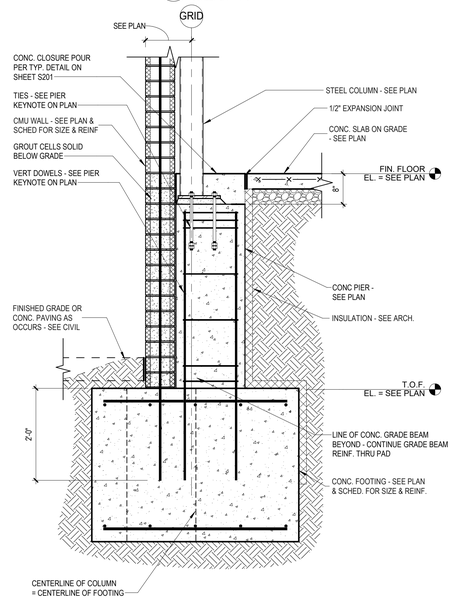

12 STEEL COLUMN ON PIER AT LOW GRADE
SCALE: 3/4" = 1'-0"

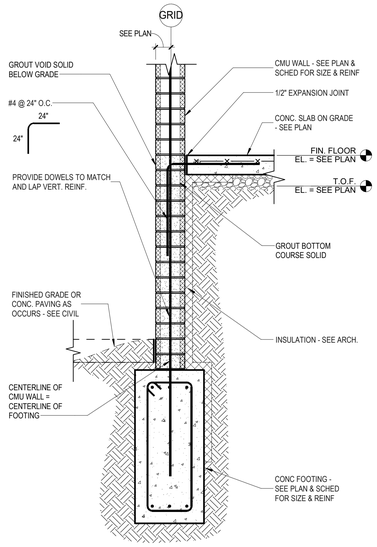

13 EXTERIOR MASONRY WALL AT CONCRETE GRADE BEAM LOW GRADE
SCALE: 3/4" = 1'-0"

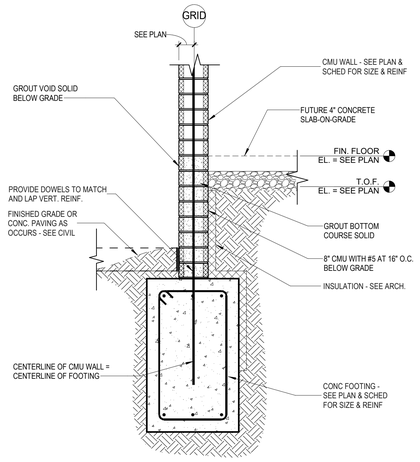

14 EXTERIOR MASONRY WALL AT CONCRETE GRADE BEAM - NO SLAB WITH LOW GRADE
SCALE: 3/4" = 1'-0"

No.:	DATE:	BY:	DESCRIPTION:

ISSUE DATE: 10/18/2024
REVISIONS:

DESIGNED: JMP
DRAWN: JMP
CHECKED: KMW

PROFESSIONAL STRUCTURAL ENGINEER
JOSHUA M. PEARCE
Lic. No. E-17798
10/18/2024
STATE OF NEBRASKA

SCHEMMER
Design with Purpose. Build with Confidence.
1044 North 115th Street, Suite 300, Omaha, Nebraska 68154 | 402.493.4800
CA0666

LANOHA DEVELOPMENT
HAWTHORNE COURT MULTI-TENANT BUILDING
17662 WELCH PLAZA
OMAHA, NE 68154
FOUNDATION DETAILS

PROJECT NO.: 010347.001

S202

C:\Users\jpearce\Documents\Revit_temp\010347001-STRUC_R23_jpearce.RK5W.rvt
10/18/2024 12:37:45 PM

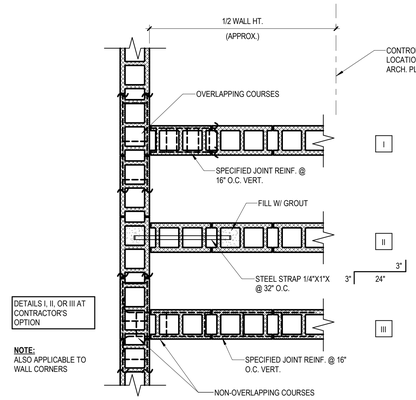

1 TYPICAL CMU WALL INTERSECTION DETAILS
SCALE: 3/4" = 1'-0"

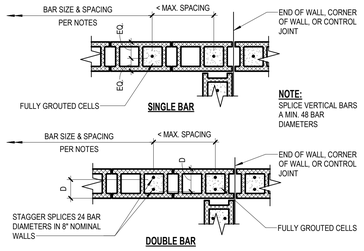

NOMINAL WALL THICKNESS	D (INCHES)	ALLOWABLE TOLERANCE
8"	5.25	+/- 1/2"
10"	7.25	+/- 1/2"
12"	9.00	+/- 3/4"

2 TYPICAL CMU WALL END REINFORCING
SCALE: 3/4" = 1'-0"

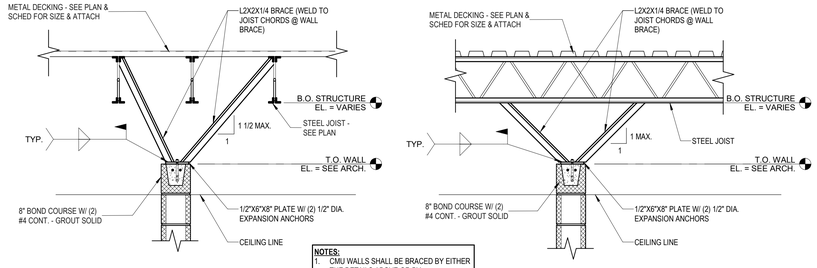

NOTES:
1. CMU WALLS SHALL BE BRACED BY EITHER THE DETAILS ABOVE OR BY INTERSECTING WALLS @ SPACING NOT TO EXCEED 8'-0".
2. SEE ARCHITECTURAL PLANS FOR LOCATIONS OF PARTITION WALLS.

3 TYPICAL CMU PARTITION BRACE TO STEEL JOISTS
SCALE: 3/4" = 1'-0"

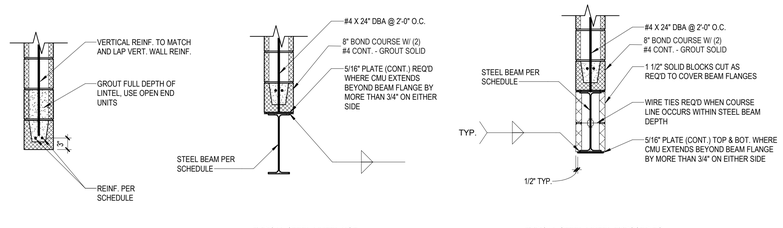

4 TYPICAL CMU LINTEL DETAILS
SCALE: 3/4" = 1'-0"

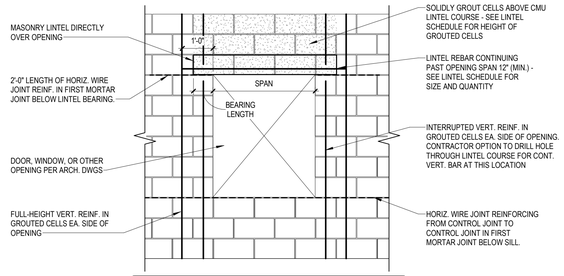

NOTES:
1. OTHER WALL REINFORCING NOT SHOWN. SEE PLANS, SCHEDULE AND SECTIONS FOR TYPICAL WALL REINFORCING.
2. CONTROL JOINTS SHALL BE PLACED A MIN. OF Z'-0" AWAY FROM OPENINGS. SEE ARCH. ELEVATIONS FOR LOCATIONS.
3. SEE LINTEL SCHEDULE FOR REQUIRED BEARING LENGTH.

CMU LINTELS

5 TYPICAL LINTEL ELEVATIONS
SCALE: 1/2" = 1'-0"

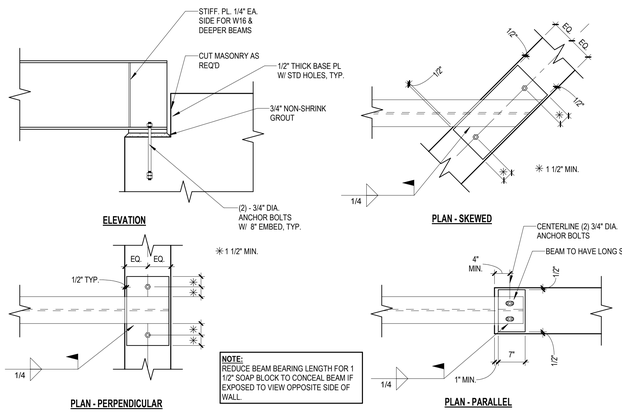

NOTE:
REDUCE BEAM BEARING LENGTH FOR 1 1/2" SOAP BLOCK TO CONCEAL BEAM IF EXPOSED TO VIEW OPPOSITE SIDE OF WALL.

6 TYPICAL BASE PLATE AT STEEL BEAM BEARING ON CMU
SCALE: 3/4" = 1'-0"

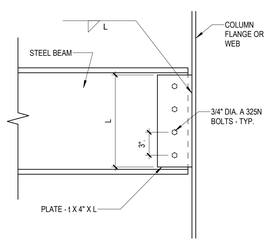

BEAM TO COLUMN CONNECTION SCHEDULE					
BEAM SIZE	# BOLTS, N	HOLE TYPE	WELD LENGTH, L (IN.)	PL. THICKNESS, t (IN.)	WELD SIZE (IN.)
W8	2	STD	6	1/4	1/4
W10	2	STD	6	1/4	1/4
W12	3	STD	9	3/8	1/4
W14	3	STD	9	3/8	1/4
W16	4	STD	12	3/8	1/4
W18	4	STD	12	3/8	1/4
W21	5	SSLT	15	3/8	1/4
W24	7	SSLT	21	3/8	1/4
W27	8	SSLT	23 1/2	3/8	1/4

7 TYPICAL STEEL BEAM TO COLUMN CONNECTION
SCALE: 3/4" = 1'-0"

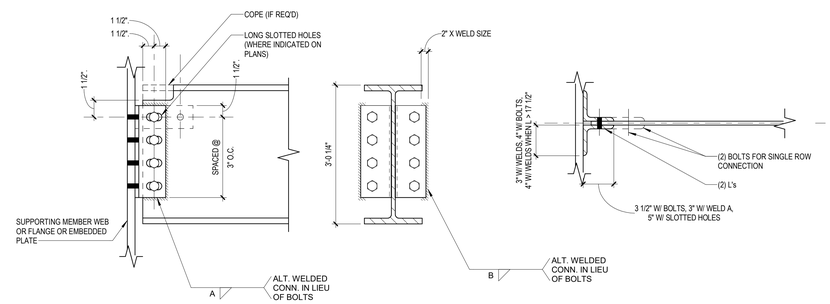

8 TYPICAL STEEL BEAM TO BEAM CONNECTION
SCALE: 3/4" = 1'-0"

DOUBLE ANGLE FRAMED BEAM CONNECTIONS
(BEARING-TYPE OR ALTERNATE WELDED CONNECTIONS)

BOLT DIA.: 3/4"
BOLT TYPE: N (X: THREADS EXCLUDED; N: THREADS INCLUDED)
HOLE TYPE: STANDARD OR SHORT SLOTTED / PERPENDICULAR TO FORCE

MEMBER GROUP	CONNECTING ANGLES		NO. OF BOLT ROWS	ALT. WELD - A	ALT. WELD - B
	THICKNESS	LENGTH			
	IN.	IN.		IN.	IN.
W8 X 10-15	1/4	6	2	3/16	1/4
W8 X 18-35	5/16	6	2	1/4	1/4
W10 X 12-26	5/16	6	2	1/4	1/4
W12 X 14-30	5/16	6	2	1/4	1/4
W14 X 22-30	5/16	9	3	1/4	1/4
W16 X 26-36	5/16	12	4	1/4	1/4
W18 X 35-40	5/16	12	4	1/4	1/4
W21 X 44-62	5/16	12	4	1/4	1/4
W24 X 55-62	5/16	15	5	1/4	1/4
W27 X 84-161	5/16	21	7	1/4	1/4

NOTE:
DETAIL IS SIMILAR AT CONDITION WITH BEAM PERPENDICULAR TO WALL AT END OF WALL

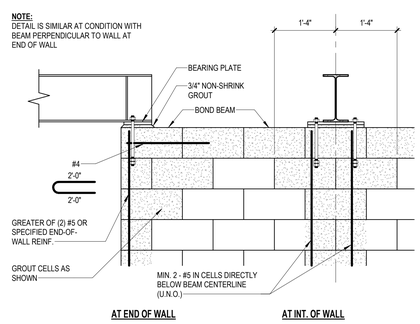

9 TYPICAL CMU WALL REINFORCING AT STEEL BEAM BEARING
SCALE: 3/4" = 1'-0"

DESIGNED: JMP
DRAWN: JMP
CHECKED: KMW

ISSUE DATE: 10/18/2024
REVISIONS:
No.: DATE: BY: DESCRIPTION:

PROFESSIONAL STRUCTURAL ENGINEER
JOSHUA M. PEARCE
E-17798
10/18/2024
STATE OF NEBRASKA

SCHEMMER
Design with Purpose. Build with Confidence.
1044 North 115th Street, Suite 300, Omaha, Nebraska 68154 | 402.493.4800
CA0666

LANOHA DEVELOPMENT
HAWTHORNE COURT MULTI-TENANT BUILDING
17662 WELCH PLAZA
OMAHA, NE 68154
TYPICAL FRAMING DETAILS

PROJECT NO.: 010347.001

S301

C:\Users\jpearce\Documents\Revit_temp\010347001-STRUC_R23_jpearce.RK43W.rvt
10/18/2024 12:27:48 PM

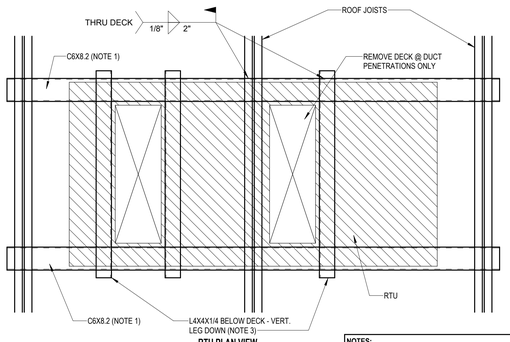

RTU PLAN VIEW

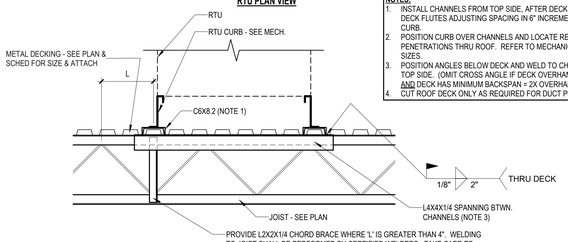

RTU SECTION

NOTES:
1. INSTALL CHANNELS FROM TOP SIDE, AFTER DECK PLACEMENT. LOCATE IN DECK FLUTES ADJUSTING SPACING IN 6" INCREMENTS TO SUPPORT EDGE OF CURB.
2. POSITION CURB OVER CHANNELS AND LOCATE REQUIRED DUCT PENETRATIONS THRU ROOF. REFER TO MECHANICAL DRAWINGS FOR EXACT SIZES.
3. POSITION ANGLES BELOW DECK AND WELD TO CHANNELS THRU DECK FROM TOP SIDE. (OMIT CROSS ANGLE IF DECK OVERHANG DOES NOT EXCEED 1'-0" AND DECK HAS MINIMUM BACKSPAN = 2X OVERHANG DIMENSION.)
4. CUT ROOF DECK ONLY AS REQUIRED FOR DUCT PENETRATIONS.

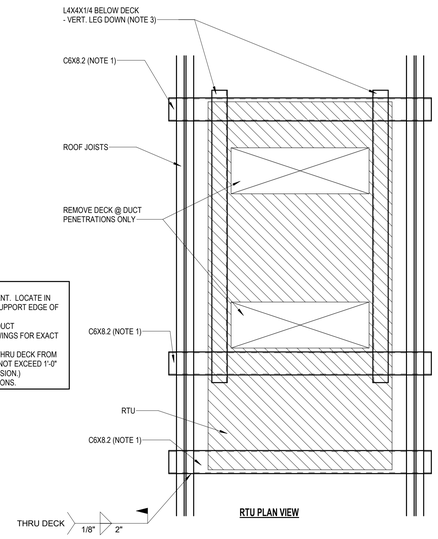

RTU PLAN VIEW

1 TYPICAL RTU SUPPORT FRAMING
SCALE: 3/4" = 1'-0"

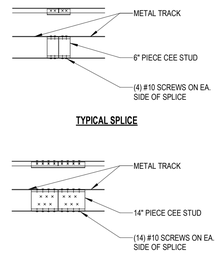

TYPICAL SPLICE

SPLICE @ SHEAR WALLS

2 TYPICAL METAL STUD TRACK SPLICE
SCALE: 3/4" = 1'-0"

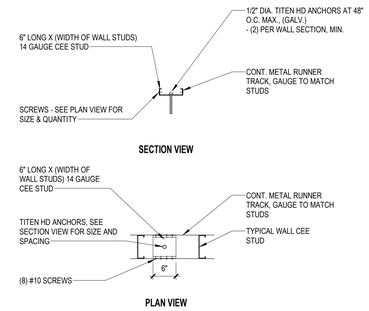

SECTION VIEW

PLAN VIEW

3 TYPICAL METAL STUD TRACK ANCHOR
SCALE: 3/4" = 1'-0"

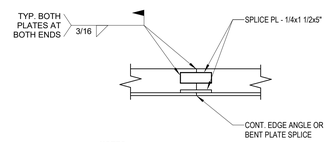

NOTES:
THIS SPLICE DETAIL APPLIES TO ALL EDGE ANGLES AND EDGE BENT PLATES NOTED AS CONTINUOUS (CONT.)

4 TYPICAL DIAPHRAGM CHORD SPLICE
SCALE: 3/4" = 1'-0"

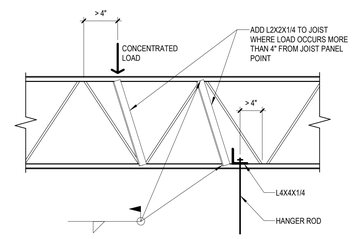

5 TYPICAL STEEL JOISTS CONCENTRATED LOAD DETAIL
SCALE: 3/4" = 1'-0"

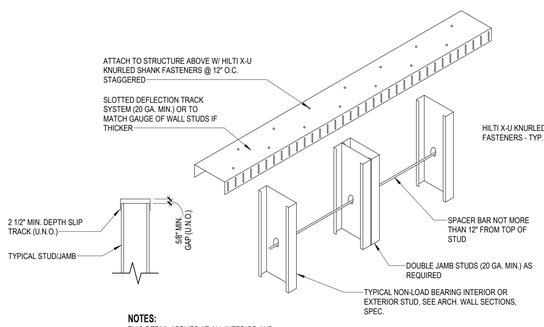

NOTES:
THIS DETAIL APPLIES AT ALL INTERIOR AND EXTERIOR NON-LOAD BEARING STEEL STUD SYSTEM WALLS THAT ARE ATTACHED TO STRUCTURE ABOVE U.N.O.

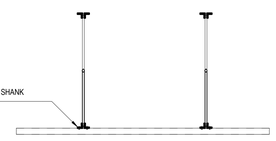

NOTES:
1. THIS DETAIL APPLIES AT ALL INTERIOR NON-LOAD BEARING STEEL STUD SYSTEM WALLS THAT ARE ATTACHED TO STRUCTURE ABOVE U.N.O.
2. WHERE FRAMING ABOVE IS UNIFORMLY SPACED, ATTACH TRACK TO BOTTOM CHORD OF STRUCTURE W/ (4) HILTI X-U KNURLED SHANK FASTENERS @ EA. JOIST.

6 TYPICAL METAL STUD DEFLECTION TRACK DETAIL
SCALE: 3/4" = 1'-0"

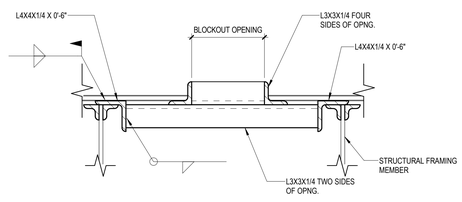

DETAIL AT OPENING LARGER THAN 18"

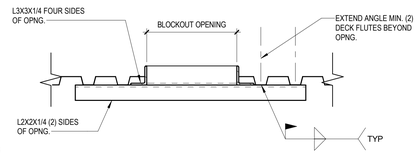

DETAIL AT OPENING FROM 6" TO 18"

NOTES:
1. OPENING DIMENSION SHALL BE TAKEN TO THE LARGEST DIMENSION IN ANY DIRECTION.
2. FOR OPENING WITH DIMENSION PARALLEL TO STRUCTURAL FRAMING MEMBERS GREATER THAN 4'-0", NOTIFY ENGINEER.

7 TYPICAL ROOF DECK OPENING
SCALE: NOT TO SCALE

DESIGNED:	JMP
DRAWN:	JMP
CHECKED:	KMW

ISSUE DATE: 10/18/2024
REVISIONS:

No.:	DATE:	BY:	DESCRIPTION:

PROFESSIONAL STRUCTURAL ENGINEER
JOSHUA M. PEARCE
E-17798
10/18/2024
STATE OF NEBRASKA

SCHEMMER
Design with Purpose. Build with Confidence.
1044 North 115th Street, Suite 300, Omaha, Nebraska 68154 | 402.493.4800
CA0666

LANOHA DEVELOPMENT
HAWTHORNE COURT MULTI-TENANT BUILDING
17662 WELCH PLAZA
OMAHA, NE 68154

TYPICAL FRAMING DETAILS

PROJECT NO.: 010347.001

S302

C:\Users\jpearce\Documents\Revit_temp\010347001-STRUC_R23_jpearce_KKW.rvt
10/18/2024 12:27:49 PM

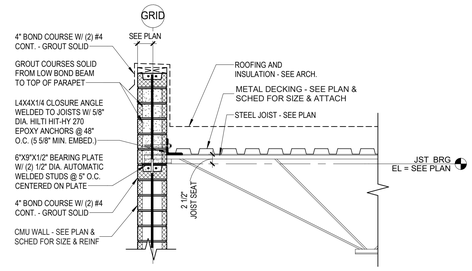

1 STEEL JOIST BEARING AT EXTERIOR MASONRY WALL
SCALE: 3/4" = 1'-0"

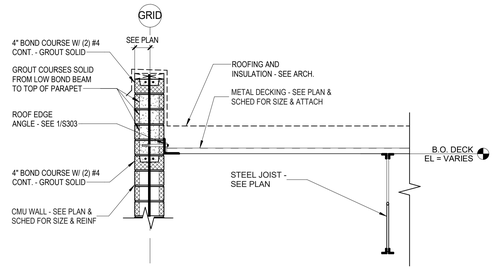

2 DECK BEARING AT CMU WALL
SCALE: 3/4" = 1'-0"

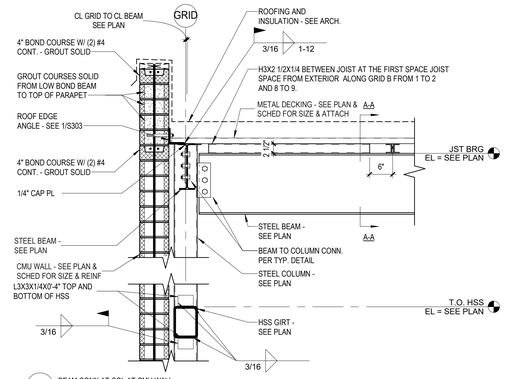

3 BEAM CONN AT COL AT CMU WALL
SCALE: 3/4" = 1'-0"

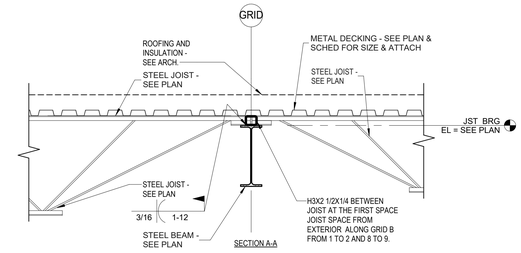

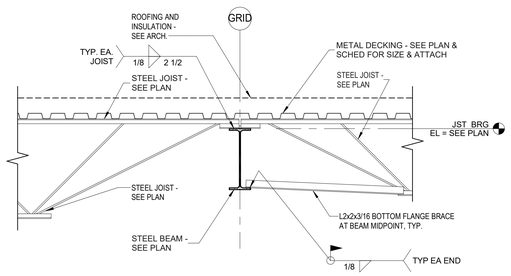

4 JOIST BEARING AT INTERIOR BEAM
SCALE: 3/4" = 1'-0"

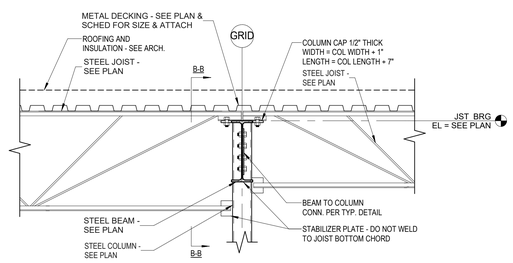

5 BEAM TO COLUMN CONNECTION 2 SIDES WITH JOIST BEARING
SCALE: 3/4" = 1'-0"

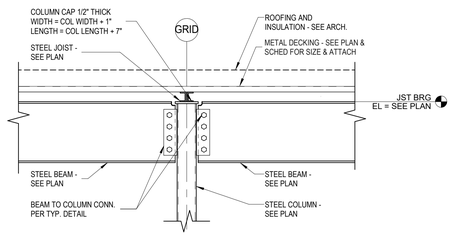

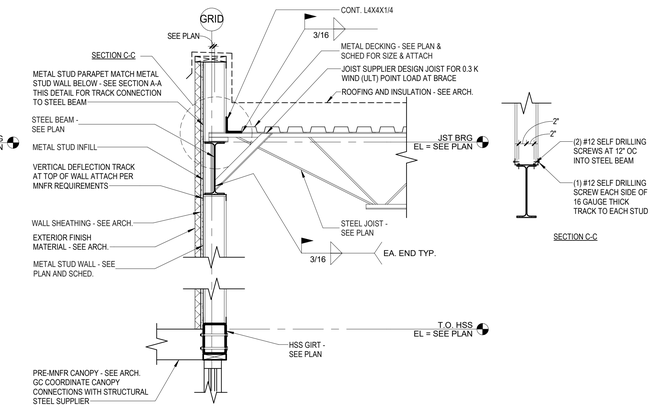

6 JOIST BEARING ON EXTERIOR BEAM AT STUD WALL
SCALE: 3/4" = 1'-0"

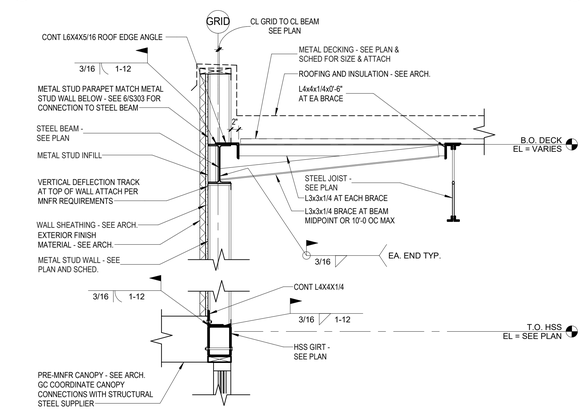

7 DECK BEARING ON BEAM AT STUD WALL
SCALE: 3/4" = 1'-0"

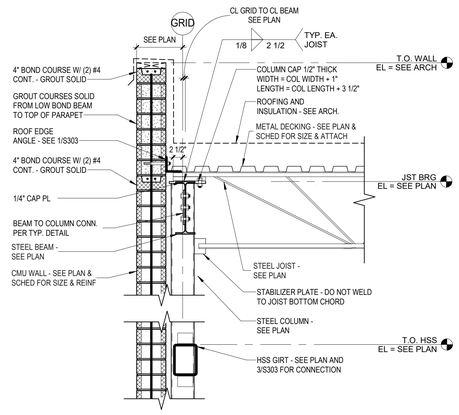

8 BEAM CONN AT COL AT CMU WALL WITH JOIST BEARING
SCALE: 3/4" = 1'-0"

No.:	DATE:	BY:	DESCRIPTION:

ISSUE DATE: 10/18/2024
REVISIONS:

DESIGNED: JMP
DRAWN: JMP
CHECKED: KMW

PROFESSIONAL STRUCTURAL ENGINEER
JOSHUA M. PEARCE
E-17758
10/18/2024
STATE OF NEBRASKA

SCHEMMER
Design with Purpose. Build with Confidence.
1044 North 115th Street, Suite 300, Omaha, Nebraska 68154 | 402.493.4800
CA0666

LANOHA DEVELOPMENT
HAWTHORNE COURT MULTI-TENANT BUILDING
17662 WELCH PLAZA
OMAHA, NE 68154
FRAMING DETAILS

PROJECT NO.: 010347.001

S303

C:\Users\jpearce\Documents\Revit_temp\010347001-STRUC_R23_jpearce_KKXW.rvt
10/18/2024 12:37:32 PM

SYMBOL LEGEND

HVAC PIPING

LPS	LOW PRESSURE STEAM
LPR	LOW PRESSURE RETURN
MPS	MEDIUM PRESSURE STEAM
MPR	MEDIUM PRESSURE RETURN
HPS	HIGH PRESSURE STEAM
HPR	HIGH PRESSURE RETURN
PC	PUMPED CONDENSATE
HWS	HOT WATER SUPPLY
HWR	HOT WATER RETURN
HPWS	HEAT PUMP WATER SUPPLY
HPWR	HEAT PUMP WATER RETURN
GHWS	GLYCOL HOT WATER SUPPLY
GHWR	GLYCOL HOT WATER RETURN
BBD	BOILER BLOW DOWN
ES	EXHAUST STEAM
CWS	CHILLED WATER SUPPLY
CWR	CHILLED WATER RETURN
GCWS	GLYCOL CHILLED WATER SUPPLY
GCWR	GLYCOL CHILLED WATER RETURN
RL	REFRIGERANT LIQUID LINE
RS	REFRIGERANT SUCTION LINE
RDL	REFRIGERANT DISCHARGE
CS	CONDENSER WATER SUPPLY
CR	CONDENSER WATER RETURN
HCWS	HOTICHILLED WATER SUPPLY
HCWR	HOTICHILLED WATER RETURN
CD	CONDENSATE DRAIN
G	NATURAL GAS
FOS	FUEL OIL SUPPLY
FOR	FUEL OIL RETURN
FOV	FUEL OIL VENT
FOF	FUEL OIL FILL
FOG	FUEL OIL GAGE
LPG	LIQUEFIED PETROLEUM GAS

PLUMBING PIPING

	SANITARY DRAIN (ABOVE FLOOR)
	SANITARY DRAIN (BELOW FLOOR)
GW	SANITARY GREASE WASTE
ST/OST	STORM DRAIN
ST/OST	STORM DRAIN (BELOW FLOOR)
	SANITARY VENT
AW	ACID WASTE
AV	ACID VENT
	DOMESTIC COLD WATER (DCW)
	DOMESTIC HOT WATER (DHW)
	DOMESTIC HOT WATER RECIRCULATING (DHWR)
TW	TEPID WATER
TWR	TEPID WATER RECIRCULATING
DSCW	SOFTENED COLD WATER
DSHW	SOFTENED HOT WATER
W	BURIED EXTERIOR WATER
DS	DISTILLED WATER
DI	DEIONZED WATER
RO	REVERSE OSMOSIS WATER
A	COMPRESSED AIR
VAC	VACUUM
OX	OXYGEN
N	NITROGEN
WAGO	WASTE AND ANESTHETIC GAS DISPOSAL
MA	MEDICAL AIR

FIRE PROTECTION

D	SPRINKLER DRAIN
F	FIRE SUPPRESSION PIPING
	FIRE DEPARTMENT CONNECTION
FS	FLOW SWITCH
TS	TAMPER SWITCH

VALVES

	MANUAL BALANCING VALVE
	ISOLATION VALVE
	CHECK VALVE
M	CONTROL VALVE (2 WAY)
M	CONTROL VALVE (3 WAY)
	AUTO FLOW CONTROL VALVE
	HOSE END DRAIN VALVE
	PRESSURE REDUCING VALVE
S	SOLENOID VALVE
	TEMP & PRESS RELIEF (OR) SAFETY VALVE-STEAM
	THERMOSTATIC MIXING VALVE

PIPING SPECIALTIES AND FITTINGS

CO — WCO	CLEANOUT / WALL CLEANOUT
GCO	GRADE CLEANOUT
DGCO	DOUBLE - GRADE CLEANOUT
VTR	PLUMBING VENT THRU ROOF
FD_	FLOOR DRAIN
FS_	FLOOR SINK
RD_	ROOF DRAIN
ORD_	OVERFLOW ROOF DRAIN
	TRENCH DRAIN
MH	MANHOLE
	OXYGEN OUTLET
	VACUUM OUTLET
	AIR OUTLET
	NITROGEN OUTLET
	WASTE AND ANESTHETIC GAS DISPOSAL OUTLET
MA	MEDICAL AIR OUTLET
	PIPE CAP
	ELBOW UP
	ELBOW DOWN
	TEE
	TEE UP
	TEE DOWN
	STRAINER
	UNION
	AIR VENT
	FLEXIBLE PIPE CONNECTION
	EXPANSION JOINT
	PIPE ANCHOR
	PIPE GUIDE
	THERMOMETER
	PRESSURE GAUGE
HB	HOSE BIBB
RHY	ROOF HYDRANT
WH	WALL HYDRANT
	STEAM TRAP

MISCELLANEOUS SYMBOLS

DEMO / EXISTING	DEMO TO EXISTING CONNECTION
NEW / EXISTING	NEW TO EXISTING CONNECTION

HVAC DUCTWORK AND SPECIALTIES

18x10	RECT DUCT-1ST FIG IS SIDE SHOWN
18 Ø	ROUND DUCT
18/10	FLAT OVAL DUCT-1ST FIG IS SIDE SHOWN
	ACOUSTICAL DUCT LINER

HVAC DUCTWORK AND SPECIALTIES (CONT.)

	FLEXIBLE DUCTWORK CONNECTION
	VOLUME DAMPER
	TURNING VANES
	HIGH EFFICIENCY TAKEOFF
	HIGH EFFICIENCY TAKOFF WITH VOLUME DAMPER
	SUPPLY AND FRESH AIR DUCT UP
	SUPPLY AND FRESH AIR DUCT DOWN
	RETURN DUCT UP
	RETURN DUCT DOWN
	EXHAUST DUCT UP
	EXHAUST DUCT DOWN
	ROUND DUCT UP / DOUBLE LINE PIPE
	ROUND DUCT DOWN / DOUBLE LINE PIPE
SIZE/TYPE FLOW	AIR TERMINAL (VERTICAL MOUNTING)
SIZE/TYPE FLOW	ROUND AIR TERMINAL (HORIZONTAL MOUNTING)
SIZE/TYPE FLOW	RECTANGULAR SUPPLY AIR TERMINAL (HORIZONTAL MOUNTING)
SIZE/TYPE FLOW	RECTANGULAR RETURN AIR TERMINAL (HORIZONTAL MOUNTING)
SIZE/TYPE FLOW	RECTANGULAR EXHAUST AIR TERMINAL (HORIZONTAL MOUNTING)
AFS	AIR FLOW STATION
	MOTORIZED DAMPER-PARALLEL BLADE
	MOTORIZED DAMPER-OPPOSED BLADE
	GRAVITY DAMPER
F	FIRE DAMPER-HORIZ FIRE SEPARATION
S	SMOKE DAMPER
FS	FIRESMOKE DAMPER
	FLEXIBLE DUCT
T	THERMOSTAT
H	HUMIDISTAT
T	TEMPERATURE SENSOR
CO	CARBON MONOXIDE SENSOR
CO2	CARBON DIOXIDE SENSOR
NO2	NITROGEN DIOXIDE SENSOR
X'	SENSOR WITH GUARD

REFERENCE LEGEND

DUCT SIZE	X" Ø	DIAMETER
	X"x"	WIDTH x HEIGHT
	X"/X"	WIDTH / HEIGHT
PIPE SIZE	X"	PIPE SIZE (DIAMETER)
PLUMBING FIXTURES	XXX-1	PLUMBING FIXTURE DESIGNATION
ROOM / SPACE NUMBER	ROOM NAME	ROOM NAME DESIGNATION
	101	ROOM NUMBER DESIGNATION
EQUIPMENT NUMBER	XX-1	EQUIPMENT NUMBER
REFERENCE DEMOLITION NOTE	X	DEMOLITION DESIGNATION
REFERENCE NOTE	X	REFERENCE DESIGNATION
PLAN DETAIL	X / XXXX	DETAIL NUMBER / SHEET NUMBER
SECTION/ DETAIL	SIM/OPP X / XXXX	SECTION/DETAIL NUMBER / SHEET NUMBER / INDICATES DIRECTION OF VIEW
NEW COLUMN	X	LETTER/NUMBER INDICATES NEW COLUMN LINE
EXISTING COLUMN	X	LETTER/NUMBER INDICATES EXISTING COLUMN LINE
MATCHLINE	AREA A / AREA B	
LEVEL	NAME / ELEVATION	LEVEL CALLOUT DESIGNATION / ELEVATION DESIGNATION
TITLE MARKER	1 / VIEW NAME / SCALE: 1/8" = 1'-0"	GRAPHIC AREA FOR DRAWING / DRAWING/DETAIL NUMBER / TITLE / SCALE OF THE DRAWING
NORTH ARROW	NORTH / PLAN NORTH / TRUE NORTH	

ABBREVIATIONS

A	COMPRESSED AIR
AC	AIR COMPRESSOR
ACC	AIR COOLED CONDENSER
ACCU	AIR COOLED CONDENSING UNIT
AD	AIR DOOR
AFCV	AUTO FLOW CONTROL VALVE
AHU	AIR HANDLING UNIT
AMP	AMPERE
APD	AIR PRESSURE DROP
ARU	AIR ROTATION UNIT
AS	AIR SEPARATOR
ASHP	AIR SOURCE HEAT PUMP
AV	ACID VENT
AW	ACID WASTE
B	BOILER
BC	BLOWER COIL
BD	BIDET
BFP	BACKFLOW PREVENTER
BFV	BUTTERFLY VALVE
BHP	BRAKE HORSEPOWER
BLKG	BLOCKING
BLV	BALANCING VALVE
BS	BRANCH SELECTOR BOX
BT	BATHTUB
BV	BAILL VALVE
BW	BEDPAN WASHER
CH	CHILLER
CC	COOLING COIL
CD	CONDENSATE DRAIN
CFM	CUBIC FEET PER MINUTE
CI	CAST IRON
CMU	CONCRETE MASONRY UNITS
CR	CONDENSER WATER RETURN
CRAC	COMPUTER ROOM AIR CONDITIONER
CS	CONDENSER WATER SUPPLY
CSS	CLINICAL SERVICE SINKS
CT	COOLING TOWER
CU	CONDENSING UNIT - SPLIT SYSTEM
CUH	CABINET UNIT HEATER
CWR	CHILLED WATER RETURN
CWS	CHILLED WATER SUPPLY
CWP	CHILLED WATER PUMP
DB	DRY-BULB TEMPERATURE
DCW	DOMESTIC COLD WATER
DEG	DEGREE
DF	DRINKING FOUNTAIN
DGCO	DOUBLE GRADE CLEANOUT
DH	EMERGENCY DRENCH HOSES
DHW	DOMESTIC HOT WATER
DHWR	DOMESTIC HOT WATER RECIRCULATING
DHWP	DOMESTIC HOT WATER RECIRCULATING PUMP
DI	DEIONZED WATER
DOAS	DEDICATED OUTDOOR AIR SYSTEM
DS	DISTILLED WATER
DSA	DUCT SOUND ATTENUATORS
DSCW	DOMESTIC SOFT COLD WATER
DSHW	DOMESTIC SOFT HOT WATER
DSHWR	DOMESTIC SOFT HOT WATER RECIRCULATING
DSS	DUCTLESS SPLIT SYSTEM
DST	DOMESTIC STORAGE TANK
DTW	DOMESTIC TEPID WATER
DTWR	DOMESTIC TEPID WATER RECIRCULATING
DWET	DOMESTIC WATER EXPANSION TANK
EA	EACH
EA	EXHAUST AIR
EAT	ENTERING AIR TEMPERATURE
EDH	ELECTRIC DUCT HEATER
EEW	EMERGENCY EYE WASH
EEWS	EMERGENCY EYE WASHSHOWER
EF	EXHAUST FAN
EFF	EFFICIENCY
EFW	EMERGENCY FACE WASH
EH	EXHAUST HOOD
ERV	ENERGY RECOVERY VENTILATOR
ES	EMERGENCY SHOWER
ESP	EXTERNAL STATIC PRESSURE
ET	EXPANSION TANK
EUH	ELECTRIC UNIT HEATER
EWC	ELECTRIC WATER COOLER
EWH	ELECTRIC WATER HEATER
EWT	ENTERING WATER TEMPERATURE
F	FIRE SUPPRESSION PIPING
F-_	FURNACE
FC	FLUID COOLER
FCO	FLOOR CLEANOUT
FCU	FAN COIL UNIT
FD	FIRE DAMPER
FLA	FULL LOAD AMPS
FOR	FUEL OIL RETURN
FOS	FUEL OIL SUPPLY
FOV	FUEL OIL VENT
FPM	FEET PER MINUTE
FPS	FEET PER SECOND
FS	FLOOR SINK
FSD	FIRE/SMOKE DAMPER
FT	FINNED TUBE
G	GAS
GCWR	GLYCOL CHILLED WATER RETURN
GCWS	GLYCOL CHILLED WATER SUPPLY
GD	GARBAGE DISPOSAL
GDH	GAS DUCT HEATER
GHCR	GLYCOL HOTICHILLED WATER RETURN
GHCS	GLYCOL HOTICHILLED WATER SUPPLY
GHWR	GLYCOL HOT WATER RETURN
GHWS	GLYCOL HOT WATER SUPPLY
GI	GREASE INTERCEPTOR
GPD	GALLONS PER DAY
GPH	GALLONS PER HOUR
GPM	GALLONS PER MINUTE
GV	GAS VENT
GWH	GAS WATER HEATER
H	HUMIDIFIER
HB	HOSE BIBB
HC	HEATING COIL
HCR	HOTICHILLED WATER RETURN
HCS	HOTICHILLED WATER SUPPLY
HP	HORSEPOWER
HP-_	HEAT PUMP
HPR	HIGH PRESSURE RETURN
HPS	HIGH PRESURE STEAM
HRC	HEAT RECOVERY COIL
HVLS	HIGH VOLUME LOW SPEED
HWR	HOT WATER RETURN (HEATING)
HWS	HOT WATER SUPPLY (HEATING)
HWP	HOT WATER PUMP
HX	HEAT EXCHANGER
HY	HYDRANTS
IH	INTAKE HOOD
IRH	INFRARED RADIANT HEATER
KH	KITCHEN HOOD
KW	KILOWATT
KWH	KILOWATT HOURS
L	LAVATORY
LAT	LEAVING AIR TEMPERATURE
LPR	LOW PRESSURE RETURN
LPG	LIQUIFIED PETROLEUM GAS
LPS	LOW PRESSURE STEAM
LRA	LOCKED ROTOR AMPS
LS	LAUNDRY SINK
LV	LOUVER
LWT	LEAVING WATER TEMPERATURE
MAU	MAKE-UP AIR UNIT
MAX	MAXIMUM
MBH	1000 BTUH
MCA	MINIMUM CIRCUIT AMPS
MD	MOTORIZED DAMPER
MIN	MINIMUM
MOCP	MAXIMUM OVERCURRENT PROTECTION
MPR	MEDIUM PRESSURE RETURN
MPS	MEDIUM PRESSURE STEAM
MS	MOP SINK
N	NITROGEN
NC	NORMALLY CLOSED
NO	NORMALLY OPEN
NPCW	NONPOTABLE COLD WATER
NPHW	NONPOTABLE HOT WATER
NPHWR	NONPOTABLE HOT WATER RECIRCULATING
OA	OUTSIDE AIR
OB	OUTLET BOX
OI	OIL INTERCEPTOR
ORD	OVERFLOW ROOF DRAIN
OST	OVERFLOW STORM WATER
OX	OXYGEN
P	PUMP
PHC	PREHEAT COIL
PIV	POST INDICATING VALVE
PRV	PRESSURE REGULATING VALVE
PSF	POUNDS PER SQUARE FOOT
PSI	POUNDS PER SQUARE INCH
PSIG	POUNDS PER SQUARE INCH, GAUGE
PTAC	PACKAGED TERMINAL AIR CONDITIONER
RA	RETURN AIR
RCP	RADIANT CEILING PANEL
RD	ROOF AREA DRAINS
RF	RETURN FAN
RH	RELIEF HOOD
RHC	REHEAT COIL
RH	ROOF HYDRANT
RL	REFRIGERANT LIQUID LINE
RLA	RELIEF AIR
RLF	RELIEF FAN
RO	REVERSE OSMOSIS WATER
RPM	REVOLUTIONS PER MINUTE
RS	REFRIGERANT SUCTION LINE
RTU	ROOF TOP UNIT
RV	RELIEF VALVE
S	SINK
SA	SUPPLY AIR
SAN	SANITARY SEWER
SD	SMOKE DAMPER
SF	SUPPLY FAN
SFU	SANITARY FIXTURE UNIT
SH	SHOWER
SOI	SAND OIL INTERCEPTOR
SP	STATIC PRESSURE
SP	SUMP PUMP
SSS	SURGICAL SCRUB SINK
ST	STORM WATER
T	THERMOSTAT
TD	TRENCH DRAIN
TMV	THERMOSTATIC MIXING VALVE
TONS	TONS OF REFRIGERATION
TSP	TOTAL STATIC PRESSURE
UH	UNIT HEATER
UR	URINAL
V	VENT
VAC	VACUUM
VAV	VARIABLE AIR VOLUME
VD	VOLUME DAMPER
VEL	VELOCITY
VFD	VARIABLE FREQUENCY DRIVE
VRF	VARIABLE REFRIGERANT FLOW
VTR	VENT THRU ROOF
WB	WET BULB
WC	WATER CLOSETS
WCO	WALL CLEANOUT
WF	WASH FOUNTAINS
WFU	WATER FIXTURE UNITS
WH	WALL HYDRANT
WMB	WASHING MACHINE BOX
WPD	WATER PRESSURE DROP
WS	WATER SOFTENER
WSHP	WATER SOURCE HEAT PUMP
WWHP	WATER TO WATER HEAT PUMP
YH	YARD HYDRANT

GENERAL NOTES

A. ALL CONTRACTORS ARE RESPONSIBLE FOR REVIEWING ENTIRE SET OF DOCUMENTS TO DETERMINE THEIR FULL SCOPE OF WORK. CONTRACTOR SHALL NOT BE ALLOWED EXTRA COSTS DUE TO FAILURE TO REVIEW ENTIRE SET OF DOCUMENTS.

B. CONTRACTOR SHALL TAKE ALL MEASUREMENTS FOR WORK AND BE RESPONSIBLE FOR SAME. CONTRACTOR SHALL ADJUST FOR ACTUAL FIELD CONDITIONS AT NO ADDITIONAL EXPENSE TO OWNER. COORDINATE THE WORK AND SHOP DRAWINGS WITH ALL OTHER TRADES AFFECTED.

C. ALL PIPING IN CONCEALED LOCATIONS SHALL BE ROUTED AT RIGHT ANGLES AND PARALLEL TO BUILDING WALLS UNLESS OTHERWISE INDICATED.

D. ALL PLUMBING INSTALLATION SHALL BE IN ACCORDANCE WITH THE REQUIREMENTS OF THE LOCAL AUTHORITY HAVING JURISDICTION.

REF. NOTES (◇)

PROJECT PLUMBING REFERENCED NOTES

SEE INDIVIDUAL SHEETS FOR REFERENCE NOTES.

PLUMBING SHEET LIST

P 00	PLUMBING INFO SHEET
P 01	SHEET SPECIFICATIONS - PLUMBING
P 02	SHEET SPECIFICATIONS - PLUMBING
P101	FLOOR PLAN, DETAILS, & SCHEDULES - PLUMBING

DESIGNED: MLB
DRAWN: MLB
CHECKED: AJP

ISSUE DATE: 10/18/2024
REVISIONS:

No.:	DATE:	BY:	DESCRIPTION:

PROFESSIONAL MECHANICAL ENGINEER
ANTHONY J. POSPISIL
E-20118
STATE OF NEBRASKA
10/18/2024

SCHEMMER
Design with Purpose. Build with Confidence.
1044 North 115th Street, Suite 300, Omaha, Nebraska 68154 | 402.493.4800
CA0666

LANOHA DEVELOPMENT
HAWTHORNE COURT MULTI-TENANT BUILDING
17662 WELCH PLAZA
OMAHA, NE 68154
PLUMBING INFO SHEET

PROJECT NO.: 010347.001

P 00

SECTION 220000—GENERAL PLUMBING REQUIREMENTS

PART 1—GENERAL

1.1 DESCRIPTION OF WORK

A. This Division includes all labor, materials, equipment, tools, supervision, start-up services, Owner training, etc., including all incidental and related items, necessary to complete installation and successfully test and start up and operate the Plumbing systems indicated on the drawings, and as described in each Section of Division 220000 Specifications.

B. All work shall be completed in compliance with local codes, rules, and regulations. In the event that the plans conflict with any rules, regulation, or codes, the rules, regulations, and codes shall govern. Where the plans exceed code requirements, the plans shall govern.

C. The Contractor and his Subcontractors shall include all materials, labor, and necessary equipment in his bid.

1.2 DRAWINGS

A. The drawings are generally diagrammatic and show general location and arrangement of equipment, piping, and accessories. The contractor shall provide and install all necessary equipment, fittings, offsets and other components required to adapt to field conditions, interferences, and code requirements to deliver a complete and functional system.

B. Deviations from the drawings, with the exception of changes to field conditions, and do not effect system functionality, shall not be made without the written approval of the Engineer.

C. Architectural and Structural drawings take precedence in all matters pertaining to the building structure. Plumbing drawings take precedence in all matter pertaining to plumbing work and electrical drawings to electrical work. Where conflicts between trades exist, report conflicts or differences to the Architect and Engineer.

1.3 COORDINATION

A. The Contractor shall examine the plans and coordinate with other trades for scheduling of work.

B. Coordinate all penetrations with architectural and structural trades.

C. Refer to architectural plans for exact locations and heights of fixtures.

D. Refer to architectural plans for coordination of all ceiling mounted access panels for plumbing equipment that requires access.

E. All plumbing equipment and piping located above ceiling shall be installed to preserve ceiling heights listed on architect ceiling plans.

1.4 GUARANTEE

A. Contractor shall guarantee that all labor, materials and equipment are free from defects. Contractor shall agree to replace or repair any part of their project scope that becomes defective with one year from substantial completion and following final acceptance from the Owner.

1.5 PERMITS AND FEES

A. The Contractor shall be responsible for coordinating and obtaining all applicable agency approvals for utility connections and permits.

1.6 ACTION SUBMITTALS

A. Provide product submittals for all required spefication sections. Submittals shall be submitted in PDF format.

B. Contractor shall review and mark with approval stamp before submitting to Architect.

1.7 EQUIPMENT AND MATERIAL MANUFACTUERS

A. All equipment shall be provided with normally supplied accessories needed for complete installation.

B. All equipment shall be new and shall be standard products form the current manufacture product line offering.

C. If an alternate manufacturer to the basis of design is submitted and approved, the Contractor shall assume all costs required to adapt the system to the submitted piece of equipment, including, but not limited to: piping, sheet metal, electrical work, and building alterations. Alternate equipment shall conform to all space requirements and operating conditions.

1.8 QUALITY ASSURANCE

A. Structural Steel Welding Qualifications: Qualify procedures and personnel according to AWS D1.1/D1.1M, "Structural Welding Code - Steel."

B. Pipe Welding Qualifications: Qualify procedures and operators according to ASME Boiler and Pressure Vessel Code.

1.9 FIELD CONDITIONS

A. Interruption of Existing Sanitary Waste and Domestic Water Service: Do not interrupt service to facilities occupied by Owner or others unless permitted under the following conditions and then only after arranging to provide temporary service according to requirements indicated:

1. Notify Owner no fewer than two days in advance of proposed interruption of sanitary waste service.

2. Do not proceed with interruption of sanitary waste service without Owner's written permission.

PART 2—PRODUCTS (NOT USED)

PART 3—EXECUTION

3.1 PROTECTION AND HANDLING OF EQUIPMENT

A. The Contractor shall be responsible for ensuring all equipment and materials delivered to the site are protected from theft and damage until time of project turnover to the Owner.

B. All plumbing fixtures and piping shall be protected from damage and use after installation. No fixtures shall be used as temporary facilities unless the Contractor has received written permission from the Owner.

3.2 OPERATION AND MAINTANCE

A. Prior to final inspections, the Contractor shall provide training to the Owner on operation, adjustment, and maintenance on all installed equipment.

B. The Contractor shall prepare and turnover to the Owner a binder with all operation and maintained manuals for all equipment installed.

3.3 ACCESSIBILITY

A. All equipment installed shall fit within the designated space with adequate access for service and maintained and required by the manufacturer.

3.4 CLEANING AND PROTECTION

A. Each trade is responsible for maintain a clean and hazard free work area.

B. After each piece of equipment has been installed and tested, each system shall be cleaned and flushed.

C. Clean interior of piping. Remove dirt and debris as work progresses.

D. Protect sanitary waste, vent piping, and drains during remainder of construction period to avoid clogging with dirt and debris and to prevent damage from traffic and construction work.

E. Place plugs in ends of uncompleted piping at end of day and when work stops.

F. Repair damage to adjacent materials caused by installation of plumbing systems.

3.5 FIELD QUALITY CONTROL

A. Inspections:

1. Do not enclose, cover, or put piping into operation until it has been inspected and approved by authorities having jurisdiction.

2. During installation, notify authorities having jurisdiction at least one day before inspection must be made. Perform tests specified below in presence of authorities having jurisdiction:

a. Roughing-in Inspection: Arrange for inspection of piping before concealing or closing in after roughing in and before setting fixtures.

b. Final Inspection: Arrange for authorities having jurisdiction to observe tests specified in "Piping Tests" Subparagraph below and to ensure compliance with requirements.

3. Reinspection: If authorities having jurisdiction find that piping will not pass tests or inspections, make required corrections and arrange for reinspection.

4. Reports: Prepare inspection reports and have them signed by authorities having jurisdiction.

5. Piping and specialties should be considered defective if they do not pass tests and inspections

B. Prepare test and inspection reports. Reports shall be included with final Operation and Maintenance manual provided to owner.

END OF SECTION

SECTION 220517—SLEEVES AND SLEEVE SEALS FOR PLUMBING PIPING

PART 1—GENERAL

1.1 ACTION SUBMITTALS

A. Product Data: For each type of product.

PART 2—PRODUCTS

2.1 SLEEVES

A. Steel Pipe Sleeves: ASTM A 53/A 53M, Type E, Grade B, Schedule 40, galvanized, with plain ends and integral welded waterstop collar.

B. PVC Pipe Sleeves: ASTM D 1785, Schedule 40.

2.2 SLEEVE-SEAL SYSTEMS

A. Description:

1. Modular sealing-element unit, designed for field assembly, for filling annular space between piping and sleeve.

2. Designed to form a hydrostatic seal of 20 psig (137 kPa) minimum.

3. Sealing Elements: EPDM-rubber interlocking links shaped to fit surface of pipe. Include type and number required for pipe material and size of pipe.

4. Pressure Plates: Composite plastic.

5. Connecting Bolts and Nuts: Carbon steel, with corrosion-resistant coating, ASTM B 633 of length required to secure pressure plates to sealing elements.

2.3 GROUT

A. Description: Nonshrink, for interior and exterior sealing openings in non-fire-rated walls or floors.

B. Standard: ASTM C 1107/C 1107M, Grade B, post-hardening and volume-adjusting, dry, hydraulic-cement grout.

C. Design Mix: 5000-psi (34.5-MPa), 28-day compressive strength.

D. Packaging: Premixed and factory packaged.

PART 3—EXECUTION

3.1 SLEEVE INSTALLATION

A. Install sleeves for piping passing through penetrations in floors, partitions, roofs, and walls.

B. For sleeves that will have sleeve-seal system installed, select sleeves of size large enough to provide 1-inch (25-mm) annular clear space between piping and concrete slabs and walls.

C. Install sleeves in concrete floors, concrete roof slabs, and concrete walls as new slabs and walls are constructed.

1. Cut sleeves to length for mounting flush with both surfaces.

a. Exception: Extend sleeves installed in floors of mechanical equipment areas or other wet areas 2 inches (50 mm) above finished floor level.

2. Using grout, seal the space outside of sleeves in slabs and walls without sleeve-seal system.

D. Install sleeves for pipes passing through interior partitions.

1. Cut sleeves to length for mounting flush with both surfaces.

2. Install sleeves that are large enough to provide 1/4-inch (6.4-mm) annular clear space between sleeve and pipe or pipe insulation.

3. Seal annular space between sleeve and piping or piping insulation; use joint sealants appropriate for size, depth, and location of joint.

3.2 SLEEVE-SEAL-SYSTEM INSTALLATION

A. Install sleeve-seal systems in sleeves in exterior concrete walls and slabs-on-grade at service piping entries into building.

B. Select type, size, and number of sealing elements required for piping material and size and for sleeve ID or hole size. Position piping in center of sleeve. Center piping in penetration, assemble sleeve-seal system components, and install in annular space between piping and sleeve. Tighten bolts against pressure plates that cause sealing elements to expand and make a watertight seal.

3.3 SLEEVE AND SLEEVE-SEAL SCHEDULE

A. Use sleeves and sleeve seals for the following piping-penetration applications:

2. Exterior Concrete Walls below Grade:

a. Piping, all sizes: galvanized steel pipe sleeve with sleeve seal system. Select sleeve size to allow for 1 inch (25mm) annular space between piping and sleeve for installing sleeve seal system

3. Concrete Slabs-on-Grade:

a. Piping, all sizes: galvanized steel pipe sleeve with sleeve seal system. Select sleeve size to allow for 1 inch (25mm) annular space between piping and sleeve for installing sleeve seal system

4. Interior Partitions:

a. Piping, all sizes: galvanized steel pipe sleeve

END OF SECTION

SECTION 220523—VALVES FOR PLUMBING PIPING

PART 1—GENERAL

1.1 ACTION SUBMITTALS

A. Product Data: For each type of valve.

1. Certification that products comply with NSF 61 Annex G.

PART 2—PRODUCTS

2.1 GENERAL REQUIREMENTS FOR VALVES

A. NSF Compliance: NSF 61 Annex G and NSF 372 for valve materials for potable-water service.

B. Bronze valves shall be made with dezincification-resistant materials. Bronze valves made with copper alloy (brass) containing more than 15 percent zinc are not permitted.

C. Valve Pressure-Temperature Ratings: Not less than indicated and as required for system pressures and temperatures.

D. Valve Sizes: Same as upstream piping unless otherwise indicated.

E. Valves in Insulated Piping:

1. Include 2-inch (50-mm) stem extensions.

2. Extended operating handles of nonthermal-conductive material and protective sleeves that allow operation of valves without breaking vapor seals or disturbing insulation.

3. Memory stops that are fully adjustable after insulation is applied.

2.2 BRONZE BALL VALVES

A. Bronze Ball Valves, Two-Piece with Full Port, and Bronze or Brass Trim:

1. Description:

a. Standard: MSS SP-110.
b. CWP Rating: 600 psig (4140 kPa).
c. Body Design: Two piece.
d. Body Material: Bronze.
e. Ends: Threaded and soldered.
f. Seats: PTFE.
g. Stem: Bronze or brass.
h. Ball: Chrome-plated brass.
i. Port: Full.

2.3 BRONZE SWING CHECK VALVES

A. Bronze Swing Check Valves with Bronze Disc, Class 125:

1. Description:

a. Standard: MSS SP-80, Type 3.
b. CWP Rating: 200 psig (1380 kPa).
c. Body Design: Horizontal flow.
d. Body Material: ASTM B 62, bronze.
e. Ends: Threaded or soldered. See valve schedule articles.
f. Disc: Bronze.

PART 3—EXECUTION

3.1 EXAMINATION

A. Examine valve interior for cleanliness, freedom from foreign matter, and corrosion. Remove special packing materials, such as blocks, used to prevent disc movement during shipping and handling. Operate valves in positions from fully open to fully closed. Examine guides and seats made accessible by such operations. Do not attempt to repair defective valves; replace with new valves.

3.2 VALVE INSTALLATION

A. Install valves with unions or flanges at each piece of equipment arranged to allow service, maintenance, and equipment removal without system shutdown.

B. Locate valves for easy access and provide separate support where necessary.

C. Install valves in horizontal piping with stem at or above center of pipe.

D. Install valves in position to allow full stem movement.

3.3 DOMESTIC HOT- AND COLD-WATER VALVE SCHEDULE

A. Pipe NPS 2 (DN 50) and Smaller:

1. Bronze Valves: May be provided with solder-joint or threaded ends.

2. Bronze ball valves, two-piece with full port and bronze or brass trim.

3.4 DOMESTIC HOT- AND COLD-WATER CHECK VALVE SCHEDULE

A. Pipe NPS 2 (DN 50) and Smaller: Bronze swing check valves with bronze disc, Class 125, with soldered end connections.

END OF SECTION

SECTION 220529—HANGERS AND SUPPORTS FOR PLUMBING PIPING AND EQUIPMENT

PART 1—GENERAL

1.1 ACTION SUBMITTALS

A. Product Data: For each type of product indicated.

PART 2—PRODUCTS

2.1 METAL PIPE HANGERS AND SUPPORTS

A. Galvanized Steel Pipe Hangers and Supports:

1. Description: MSS SP-58, Types 1 through 58, factory-fabricated components.

2. Galvanized Metallic Coatings: Pregalvanized or hot dipped.

3. Padded Hangers: Hanger with fiberglass or other pipe insulation pad or cushion to support bearing surface of piping.

4. Hanger Rods: Continuous-thread rod, nuts, and washer made of galvanized steel.

B. Copper Pipe Hangers:

1. Description: MSS SP-58, Types 1 through 58, copper-coated-steel, factory-fabricated components.

2. Hanger Rods: Continuous-thread rod, nuts, and washer made of copper-coated steel.

2.2 TRAPEZE PIPE HANGERS

A. Description: MSS SP-69, Type 59, shop- or field-fabricated pipe-support assembly made from structural carbon-steel shapes with MSS SP-58 carbon-steel hanger rods, nuts, saddles, and U-bolts.

2.3 METAL FRAMING SYSTEMS

A. MFMA Manufacturer Metal Framing Systems:

1. Description: Shop- or field-fabricated pipe-support assembly for supporting multiple parallel pipes.

2. Standard: MFMA-4.

3. Channels: Continuous slotted steel channel with inturned lips.

4. Channel Nuts: Formed or stamped steel nuts or other devices designed to fit into channel slot and, when tightened, prevent slipping along channel.

5. Hanger Rods: Continuous-thread rod, nuts, and washer made of galvanized steel.

6. Metallic Coating: Hot-dipped galvanized.

2.4THERMAL-HANGER SHIELD INSERTS

A. Insulation-Insert Material for Cold Piping: ASTM C 591, Type VI, Grade 1 polyisocyanurate with 125-psig (862-kPa) minimum compressive strength and vapor barrier.

B. Insulation-Insert Material for Hot Piping: ASTM C 591, Type VI, Grade 1 polyisocyanurate with 125-psig (862-kPa) minimum compressive strength.

C. For Trapeze or Clamped Systems: Insert and shield shall cover entire circumference of pipe.

D. For Clevis or Band Hangers: Insert and shield shall cover lower 180 degrees of pipe.

E. Insert Length: Extend 2 inches (50 mm) beyond sheet metal shield for piping operating below ambient air temperature.

2.5 FASTENER SYSTEMS

A. Mechanical-Expansion Anchors: Insert-wedge-type, zinc-coated steel anchors, for use in hardened portland cement concrete; with pull-out, tension, and shear capacities appropriate for supported loads and building materials where used.

2.6 EQUIPMENT SUPPORTS

A. Description: Welded, shop- or field-fabricated equipment support made from structural carbon-steel shapes.

2.7 MISCELLANEOUS MATERIALS

A. Structural Steel: ASTM A 36/A 36M, carbon-steel plates, shapes, and bars; black and galvanized.

B. Grout: ASTM C 1107, factory-mixed and -packaged, dry, hydraulic-cement, nonshrink and nonmetallic grout; suitable for interior and exterior applications.

Properties: Nonstaining, noncorrosive, and nongaseous.

Design Mix: 5000-psi (34.5-MPa), 28-day compressive strength.

PART 3—EXECUTION

3.1 HANGER AND SUPPORT INSTALLATION

A. Metal Pipe-Hanger Installation: Comply with MSS SP-69 and MSS SP-89. Install hangers, supports, clamps, and attachments as required to properly support piping from the building structure.

B. Metal Trapeze Pipe-Hanger Installation: Comply with MSS SP-69 and MSS SP-89. Arrange for grouping of parallel runs of horizontal piping, and support together on field-fabricated trapeze pipe hangers.

1. Pipes of Various Sizes: Support together and space trapezes for smallest pipe size or install intermediate supports for smaller diameter pipes as specified for individual pipe hangers.

2. Field fabricate from ASTM A 36/A 36M, carbon-steel shapes selected for loads being supported. Weld steel according to AWS D1.1/D1.1M.

C. Metal Framing System Installation: Arrange for grouping of parallel runs of piping, and support together on field-assembled metal framing systems.

D. Thermal-Hanger Shield Installation: Install in pipe hanger or shield for insulated piping.

E. Fastener System Installation:

1. Install mechanical-expansion anchors in concrete after concrete is placed and completely cured. Install fasteners according to manufacturer's written instructions.

F. Install hangers and supports complete with necessary attachments, inserts, bolts, rods, nuts, washers, and other accessories.

G. Equipment Support Installation: Fabricate from welded-structural-steel shapes.

H. Install hangers and supports to allow controlled thermal movement of piping systems, to permit freedom of movement between pipe anchors, and to facilitate action of expansion joints, expansion loops, expansion bends, and similar units.

I. Install building attachments within concrete slabs or attach to structural steel. Install additional attachments at concentrated loads, including valves, flanges, and strainers, NPS 2-1/2 (DN 65) and larger and at changes in direction of piping. Install concrete inserts before concrete is placed; fasten inserts to forms and install reinforcing bars through openings at top of inserts.

J. Load Distribution: Install hangers and supports so that piping live and dead loads and stresses from movement will not be transmitted to connected equipment.

K. Pipe Slopes: Install hangers and supports to provide indicated pipe slopes and to not exceed maximum pipe deflections allowed by ASME B31.9 for building services piping.

L. Insulated Piping:

1. Attach clamps and spacers to piping.

a. Piping Operating above Ambient Air Temperature: Clamp may project through insulation.

b. Piping Operating below Ambient Air Temperature: Use thermal-hanger shield insert with clamp sized to match OD of insert.

c. Do not exceed pipe stress limits allowed by ASME B31.9 for building services piping.

2. Install MSS SP-58, Type 39, protection saddles if insulation without vapor barrier is indicated. Fill interior voids with insulation that matches adjoining insulation.

a. Option: Thermal-hanger shield inserts may be used. Include steel weight-distribution plate for pipe NPS 4 (DN 100) and larger if pipe is installed on rollers.

3. Install MSS SP-58, Type 40, protective shields on cold piping with vapor barrier. Shields shall span an arc of 180 degrees.

a. Option: Thermal-hanger shield inserts may be used. Include steel weight-distribution plate for pipe NPS 4 (DN 100) and larger if pipe is installed on rollers.

4. Shield Dimensions for Pipe: Not less than the following:

a. NPS 1/4 to NPS 3-1/2 (DN 8 to DN 90L): 12 inches (305 mm) long and 0.048 inch (1.22 mm) thick.

b. NPS 4 (DN 100): 12 inches (305 mm) long and 0.06 inch (1.52 mm) thick.

5. Thermal-Hanger Shields: Install with insulation same thickness as piping insulation.

3.2 EQUIPMENT SUPPORTS

A. Fabricate structural-steel stands to suspend equipment from structure overhead or to support equipment above floor.

B. Grouting: Place grout under supports for equipment and make bearing surface smooth.

3.3 METAL FABRICATIONS

A. Cut, drill, and fit miscellaneous metal fabrications for trapeze pipe hangers and equipment supports.

B. Fit exposed connections together to form hairline joints. Field weld connections that cannot be shop welded because of shipping size limitations.

C. Field Welding: Comply with AWS D1.1/D1.1M procedures for shielded, metal arc welding; appearance and quality of welds; and methods used in correcting welding work; and with the following:

1. Use materials and methods that minimize distortion and develop strength and corrosion resistance of base metals.

2. Obtain fusion without undercut or overlap.

3. Remove welding flux immediately.

4. Finish welds at exposed connections so no roughness shows after finishing and so contours of welded surfaces match adjacent contours.

3.4 ADJUSTING

A. Hanger Adjustments: Adjust hangers to distribute loads equally on attachments and to achieve indicated slope of pipe.

B. Trim excess length of continuous-thread hanger and support rods to 1-1/2 inches (40 mm) .

3.5 HANGER AND SUPPORT SCHEDULE

A. Specific hanger and support requirements are in Sections specifying piping systems and equipment.

B. Comply with MSS SP-69 for pipe-hanger selections and applications that are not specified in piping system Sections.

C. Use hangers and supports with galvanized metallic coatings for piping and equipment that will not have field-applied finish.

D. Use nonmetallic coatings on attachments for electrolytic protection where attachments are in direct contact with copper tubing.

E. Use galvanized steel pipe hangers and supports metal trapeze pipe hangers and metal framing systems and attachments for general service applications.

F. Use copper-plated pipe hangers and copper attachments for copper piping and tubing.

G. Use padded hangers for piping that is subject to scratching.

H. Use thermal-hanger shield inserts for insulated piping and tubing.

I. Horizontal-Piping Hangers and Supports: Unless otherwise indicated and except as specified in piping system Sections, install the following types:

1. Adjustable, Steel Clevis Hangers (MSS Type 1): For suspension of noninsulated or insulated, stationary pipes NPS 1/2 to NPS 30 (DN 15 to DN 750).

2. Adjustable, Swivel-Ring Band Hangers (MSS Type 10): For suspension of noninsulated, stationary pipes NPS 1/2 to NPS 8 (DN 15 to DN 200).

3. Adjustable Roller Hangers (MSS Type 43): For suspension of pipes NPS 2-1/2 to NPS 24 (DN 65 to DN 600), from single rod if horizontal movement caused by expansion and contraction might occur.

4. Complete Pipe Rolls (MSS Type 44): For support of pipes NPS 2 to NPS 42 (DN 50 to DN 1050) if longitudinal movement caused by expansion and contraction might occur but vertical adjustment is not necessary.

J. Vertical-Piping Clamps: Unless otherwise indicated and except as specified in piping system Sections, install the following types:

1. Extension Pipe or Riser Clamps (MSS Type 8): For support of pipe risers NPS 3/4 to NPS 24 (DN 24 to DN 600).

2. Carbon- or Alloy-Steel Riser Clamps (MSS Type 42): For support of pipe risers NPS 3/4 to NPS 24 (DN 20 to DN 600) if longer ends are required for riser clamps.

K. Hanger-Rod Attachments: Unless otherwise indicated and except as specified in piping system Sections, install the following types:

1. Steel Turnbuckles (MSS Type 13): For adjustment up to 6 inches (150 mm) for heavy loads.

2. Steel Clevises (MSS Type 14): For 120 to 450 deg F (49 to 232 deg CL) piping installations.

3. Swivel Turnbuckles (MSS Type 15): For use with MSS Type 11, split pipe rings.

4. Malleable-Iron Sockets (MSS Type 16): For attaching hanger rods to various types of building attachments.

5. Steel Weldless Eye Nuts (MSS Type 17): For 120 to 450 deg F (49 to 232 deg C) piping installations.

L. Building Attachments: Unless otherwise indicated and except as specified in piping system Sections, install the following types:

1. Steel or Malleable Concrete Inserts (MSS Type 18): For upper attachment to suspend pipe hangers from concrete ceiling.

2. Top-Beam C-Clamps (MSS Type 19): For use under roof installations with bar-joist construction, to attach to top flange of structural shape.

3. Side-Beam or Channel Clamps (MSS Type 20): For attaching to bottom flange of beams, channels, or angles.

4. Center-Beam Clamps (MSS Type 21): For attaching to center of bottom flange of beams.

5. C-Clamps (MSS Type 23): For structural shapes.

6. Top-Beam Clamps (MSS Type 25): For top of beams if hanger rod is required tangent to flange edge.

7. Side-Beam Clamps (MSS Type 27): For bottom of steel I-beams.

8. Steel-Beam Clamps with Eye Nuts (MSS Type 28): For attaching to bottom of steel I-beams for heavy loads.

9. Linked-Steel Clamps with Eye Nuts (MSS Type 29): For attaching to bottom of steel I-beams for heavy loads, with link extensions.

10. Malleable-Beam Clamps with Extension Pieces (MSS Type 30): For attaching to structural steel.

11. Welded-Steel Brackets: For support of pipes from below or for suspending from above by using clip and rod. Use one of the following for indicated loads:

a. Light (MSS Type 31): 750 lb (340 kg).

b. Medium (MSS Type 32): 1500 lb (680 kg).

c. Heavy (MSS Type 33): 3000 lb (1360 kg).

12. Side-Beam Brackets (MSS Type 34): For sides of steel or wooden beams.

M. Saddles and Shields: Unless otherwise indicated and except as specified in piping system Sections, install the following types:

1. Steel-Pipe-Covering Protection Saddles (MSS Type 39): To fill interior voids with insulation that matches adjoining insulation.

2. Protection Shields (MSS Type 40): Of length recommended in writing by manufacturer to prevent crushing insulation.

3. Thermal-Hanger Shield Inserts: For supporting insulated pipe.

N. Comply with MSS SP-69 for trapeze pipe-hanger selections and applications that are not specified in piping system Sections.

O. Comply with MFMA-103 for metal framing system selections and applications that are not specified in piping system Sections.

P. Use mechanical-expansion anchors instead of building attachments where required in concrete construction.

Q. Use pipe positioning systems in pipe spaces behind plumbing fixtures to support supply and waste piping for plumbing fixtures.

END OF SECTION

SECTION 220719—PLUMBING PIPING INSULATION

PART 1—GENERAL

1.1 ACTION SUBMITTALS

A. Product Data: For each type of product indicated. Include thermal conductivity, water-vapor permeance thickness, and jackets (both factory- and field-applied, if any).

PART 2—PRODUCTS

2.1 INSULATION MATERIALS

A. Comply with requirements in "Piping Insulation Schedule, General," and "Indoor Piping Insulation Schedule articles for where insulating materials shall be applied.

B. Products shall not contain asbestos, lead, mercury, or mercury compounds.

C. Products that come in contact with stainless steel shall have a leachable chloride content of less than 50 ppm when tested according to ASTM C 871.

D. Insulation materials for use on austenitic stainless steel shall be qualified as acceptable according to ASTM C 795.

E. Mineral-Fiber, Preformed Pipe Insulation:

1. Type I, 850 Deg F (454 Deg C) Materials: Mineral or glass fibers bonded with a thermosetting resin. Comply with ASTM C 547, Type I, Grade A, with factory-applied ASJ. Factory-applied jacket requirements are specified in "Factory -Applied Jackets" Article.

2.2 ADHESIVES

A. Materials shall be compatible with insulation materials, jackets, and substrates and for bonding insulation to itself and to surfaces to be insulated, unless otherwise indicated.

B. Mineral-Fiber Adhesive: Comply with MIL-A-3316C, Class 2, Grade A.

2.3 MASTICS

A. Materials shall be compatible with insulation materials, jackets, and substrates; comply with MIL-PRF-19565C, Type II.

B. Vapor-Barrier Mastic: Water based; suitable for indoor use on below-ambient services.

1. Water-Vapor Permeance: ASTM E 96/E 96M, Procedure B, 0.013 perm (0.009 metric perm) at 43-mil (1.09-mm) dry film thickness.

2. Service Temperature Range: Minus 20 to plus 180 deg F (Minus 29 to plus 82 deg C).

3. Solids Content: ASTM D 1644, 58 percent by volume and 70 percent by weight.

4. Color: White.

C. Vapor-Barrier Mastic: Solvent based; suitable for indoor use on below-ambient services.

1. Water-Vapor Permeance: ASTM F 1249, 0.05 perm (0.03 metric perm) at 35-mil (0.9-mm) dry film thickness.

2. Service Temperature Range: 0 to 180 deg F (Minus 18 to plus 82 deg C).

3. Solids Content: ASTM D 1644, 44 percent by volume and 62 percent by weight.

4. Color: White.

D. Breather Mastic: Water based; suitable for indoor and outdoor use on above-ambient services.

1. Water-Vapor Permeance: ASTM F 1249, 1.8 perms (1.2 metric perms) at 0.0625-inch (1.6-mm) dry film thickness.

2. Service Temperature Range: Minus 20 to plus 180 deg F (Minus 29 to plus 82 deg C).

3. Solids Content: 60 percent by volume and 66 percent by weight.

4. Color: White.

2.4 SECUREMENTS

A. Staples: Outward-clinching insulation staples, nominal 3/4-inch- (19-mm-) wide, stainless steel or Monel.

B. Wire: 1.6-mm (0.062-inch) soft-annealed, stainless steel.

PART 3—EXECUTION

3.1 EXAMINATION

A. Examine substrates and conditions for compliance with requirements for installation tolerances and other conditions affecting performance of insulation application.

1. Verify that systems to be insulated have been tested and are free of defects.

2. Verify that surfaces to be insulated are clean and dry.

B. Proceed with installation only after unsatisfactory conditions have been corrected.

3.2 PREPARATION

A. Surface Preparation: Clean and dry surfaces to receive insulation. Remove materials that will adversely affect insulation application.

3.3 GENERAL INSTALLATION REQUIREMENTS

A. Install insulation materials, accessories, and finishes with smooth, straight, and even surfaces; free of voids throughout the length of piping including fittings, valves, and specialties.

B. Install insulation materials, forms, vapor barriers or retarders, jackets, and thicknesses required for each item of pipe system as specified in insulation system schedules.

C. Install accessories compatible with insulation materials and suitable for the service. Install accessories that do not corrode, soften, or otherwise attack insulation or jacket in either wet or dry state.

D. Install insulation with longitudinal seams at top and bottom of horizontal runs.

E. Install multiple layers of insulation with longitudinal and end seams staggered.

F. Do not weld brackets, clips, or other attachment devices to piping, fittings, and specialties.

G. Install insulation with tight longitudinal seams and end joints. Bond seams and joints with adhesive recommended by insulation material manufacturer.

H. Where vapor barrier is indicated, seal joints, seams, and penetrations in insulation at hangers, supports, anchors, and other projections with vapor-barrier mastic.

1. Install insulation continuously through hangers and around anchor attachments.

2. For insulation application where vapor barriers are indicated, extend insulation on anchor legs from point of attachment to supported item to point of attachment to structure. Taper and seal ends at attachment to structure with vapor-barrier mastic.

3. Install insert materials and install insulation to tightly join the insert. Seal insulation to insulation inserts with adhesive or sealing compound recommended by insulation material manufacturer.

4. Cover inserts with jacket material matching adjacent pipe insulation. Install shields over jacket, arranged to protect jacket from tear or puncture by hanger, support, and shield.

I. Apply adhesives, mastics, and sealants at manufacturer's recommended coverage rate and wet and dry film thicknesses.

J. Cut insulation in a manner to avoid compressing insulation more than 75 percent of its nominal thickness.

K. Finish installation with systems at operating conditions. Repair joint separations and cracking due to thermal movement.

L. Repair damaged insulation facings by applying same facing material over damaged areas. Extend patches at least 4 inches (100 mm) beyond damaged areas. Adhere, staple, and seal patches similar to butt joints.

3.4 PENETRATIONS

A. Insulation Installation at Interior Wall and Partition Penetrations (That Are Not Fire Rated): Install insulation continuously through walls and partitions.

B. Insulation Installation at Fire-Rated Wall and Partition Penetrations: Install insulation continuously through penetrations of fire-rated walls and partitions.

3.5 GENERAL PIPE INSULATION INSTALLATION

A. Insulation Installation on Fittings, Valves, Strainers, Flanges, Unions, and Instrumentation:

1. Install insulation over fittings, valves, strainers, flanges, unions, and other specialties with continuous thermal and vapor-retarder integrity unless otherwise indicated, utilizing preformed fitting insulation and jackets with the same thickness as used for adjacent pipe. Fill joints and seams with insulating cement.

2. Insulate instrument connections for thermometers, pressure gages, pressure temperature taps, test connections, flow meters, sensors, switches, and transmitters on insulated pipes. Shape insulation at these connections by tapering it to and around the connection with insulating cement and finish with finishing cement, mastic, and flashing sealant.

3.6 INSTALLATION OF MINERAL-FIBER INSULATION

A. Insulation Installation on Straight Pipes and Tubes:

1. Secure each layer of preformed pipe insulation to pipe with wire or bands and tighten bands without deforming insulation materials.

2. Where vapor barriers are indicated, seal longitudinal seams, end joints, and protrusions with vapor-barrier mastic and joint sealant.

3. For insulation with factory-applied jackets on above-ambient surfaces, secure laps with outward clinched staples at 6 inches (150 mm) o.c.

4. For insulation with factory-applied jackets on below-ambient surfaces, do not staple longitudinal tabs. Instead, secure tabs with additional adhesive as recommended by insulation material manufacturer and seal with vapor-barrier mastic and flashing sealant.

B. Insulation Installation on Pipe Fittings and Elbows:

1. Install preformed sections of same material as straight segments of pipe insulation when available.

2. When preformed insulation elbows and fittings are not available, install mitered sections of pipe insulation, to a thickness equal to adjoining pipe insulation. Secure insulation materials with wire or bands.

C. Insulation Installation on Valves and Pipe Specialties:

1. Install preformed sections of same material as straight segments of pipe insulation when available.

2. When preformed sections are not available, install mitered sections of pipe insulation to valve body.

3. Arrange insulation to permit access to packing and to allow valve operation without disturbing insulation.

4. Install insulation to flanges as specified for flange insulation application.

3.7 PIPING INSULATION SCHEDULE, GENERAL

A. Acceptable preformed pipe and tubular insulation materials and thicknesses are identified for each piping system and pipe size range. If more than one material is listed for a piping system, selection from materials listed is Contractor's option.

B. Items Not Insulated: Unless otherwise indicated, do not install insulation the following:

1. Underground piping.

3.8 INDOOR PIPING INSULATION SCHEDULE

A. Domestic Cold Water:

1. NPS 1-1/4 (DN 32) and Larger: Insulation shall be the following:

a. Mineral-Fiber, Preformed Pipe Insulation, Type I: 1 inch (25 mm) thick.

END OF SECTION

SECTION 221116—DOMESTIC WATER PIPING

PART 1—GENERAL (NOT REQUIRED)

PART 2—PRODUCTS

2.1 PIPING MATERIALS

A. Comply with requirements in "Piping Schedule" Article for applications of pipe, tube, fitting materials, and joining methods for specific services, service locations, and pipe sizes.

B. Potable-water piping and components shall comply with NSF 14 and NSF 61 Annex G. Plastic piping components shall be marked with "NSF-pw."

C. Comply with NSF Standard 372 for low lead.

2.2 COPPER TUBE AND FITTINGS

A. Hard Copper Tube: ASTM B 88M, Type B (ASTM B 88, Type L) water tube, drawn temper.

B. Wrought-Copper, Solder-Joint Fittings: ASME B16.22, wrought-copper pressure fittings.

C. Bronze Flanges: ASME B16.24, Class 150, with solder-joint ends.

D. Copper Unions:

1. MSS SP-123.

2. Cast-copper-alloy, hexagonal-stock body.

3. Ball-and-socket, metal-to-metal seating surfaces.

4. Solder-joint or threaded ends.

2.3 PIPING JOINING MATERIALS

A. Pipe-Flange Gasket Materials:

1. Full-face or ring type unless otherwise indicated.

B. Metal, Pipe-Flange Bolts and Nuts: ASME B18.2.1, carbon steel unless otherwise indicated.

C. Solder Filler Metals: ASTM B 32, lead-free alloys.

D. Flux: ASTM B 813, water flushable.

2.4 TRANSITION FITTINGS

A. General Requirements:

1. Same size as pipes to be joined.

2. Pressure rating at least equal to pipes to be joined.

3. End connections compatible with pipes to be joined.

B. Fitting-Type Transition Couplings: Manufactured piping coupling or specified piping system fitting.

C. Sleeve-Type Transition Coupling: AWWA C219.

1. Manufacturers: Subject to compliance with requirements, provide products by one of the following:

a. Cascade Waterworks Mfg. Co.
b. Dresser, Inc.
c. Ford Meter Box Company, Inc. (The).
d. Jay R. Smith Mfg. Co.
e. JCM Industries, Inc.
f. Romac Industries, Inc.
g. Smith-Blair, Inc.

2.5 DIELECTRIC FITTINGS

A. General Requirements: Assembly of copper alloy and ferrous materials with separating nonconductive insulating material. Include end connections compatible with pipes to be joined.

B. Dielectric Nipples:

1. Standard: IAPMO PS 66.

2. Electroplated steel nipple complying with ASTM F 1545.

3. Pressure Rating and Temperature: 300 psig (2070 kPa) at 225 deg F (107 deg C).

4. End Connections: Male threaded or grooved.

5. Lining: Inert and noncorrosive, propylene.

PART 3—EXECUTION

3.1 PIPING INSTALLATION

A. Drawing plans, schematics, and diagrams indicate general location and arrangement of domestic water piping. Indicated locations and arrangements are used to size pipe and calculate friction loss, expansion, and other design considerations. Install piping as indicated unless deviations to layout are approved on coordination drawings.

B. Install shutoff valve, hose-end drain valve, strainer, pressure gage, and test tee with valve inside the building at each domestic water-service entrance.

C. Install shutoff valve immediately upstream of each dielectric fitting.

D. Install water-pressure-reducing valves downstream from shutoff valves.

E. Install domestic water piping level with 0.25 percent slope downward toward drain and plumb.

F. Rough-in domestic water piping for water-meter installation according to utility company's requirements.

G. Install piping concealed from view and protected from physical contact by building occupants unless otherwise indicated and except in equipment rooms and service areas.

H. Install piping indicated to be exposed and piping in equipment rooms and service areas at right angles or parallel to building walls. Diagonal runs are prohibited unless specifically indicated otherwise.

I. Install piping above accessible ceilings to allow sufficient space for ceiling panel removal, and coordinate with other services occupying that space.

J. Install piping to permit valve servicing.

K. Install nipples, unions, special fittings, and valves with pressure ratings the same as or higher than the system pressure rating used in applications below unless otherwise indicated.

L. Install piping free of sags and bends.

M. Install fittings for changes in direction and branch connections.

N. Install unions in copper tubing at final connection to each piece of equipment, machine, and specialty.

O. Install sleeves for piping penetrations of walls, ceilings, and floors.

P. Install sleeve seals for piping penetrations of concrete walls and slabs.

Q. Install escutcheons for piping penetrations of walls, ceilings, and floors.

3.2 JOINT CONSTRUCTION

A. Ream ends of pipes and tubes and remove burrs. Bevel plain ends of steel pipe.

B. Remove scale, slag, dirt, and debris from inside and outside of pipes, tubes, and fittings before assembly.

C. Threaded Joints: Thread pipe with tapered pipe threads according to ASME B1.20.1. Cut threads full and clean using sharp dies. Ream threaded pipe ends to remove burrs and restore full ID. Join pipe fittings and valves as follows:

Apply appropriate tape or thread compound to external pipe threads.

Damaged Threads: Do not use pipe or pipe fittings with threads that are corroded or damaged.

D. Soldered Joints for Copper Tubing: Apply ASTM B 813, water-flushable flux to end of tube. Join copper tube and fittings according to ASTM B 828 or CDA's "Copper Tube Handbook."

E. Extruded-Tee Connections are not allowed. Flanged Joints: Select appropriate asbestos-free, nonmetallic gasket material in size, type, and thickness suitable for domestic water service. Join flanges with gasket and bolts according to ASME B31.9.

F. Joints for Dissimilar-Material Piping: Make joints using adapters compatible with materials of both piping systems.

3.3 TRANSITION FITTING INSTALLATION

A. Install transition couplings at joints of dissimilar piping.

3.4 DIELECTRIC FITTING INSTALLATION

A. Install dielectric fittings in piping at connections of dissimilar metal piping and tubing.

B. Dielectric Fittings for NPS 2 (DN 50) and Smaller: Use dielectric nipples.

3.5 HANGER AND SUPPORT INSTALLATION

A. Comply with requirements for pipe hanger, support products, and installation in Section 220529 "Hangers and Supports for Plumbing Piping and Equipment."

1. Vertical Piping: MSS Type 8 or 42, clamps.

2. Individual, Straight, Horizontal Piping Runs:

a. 100 Feet (30 m) and Less: MSS Type 1, adjustable, steel clevis hangers.

b. Longer Than 100 Feet (30 m): MSS Type 43, adjustable roller hangers.

c. Longer Than 100 Feet (30 m) if Indicated: MSS Type 49, spring cushion rolls.

3. Multiple, Straight, Horizontal Piping Runs 100 Feet (30 m) or Longer: MSS Type 44, pipe rolls. Support pipe rolls on trapeze.

4. Base of Vertical Piping: MSS Type 52, spring hangers.

B. Support vertical piping and tubing at base and at each floor.

C. Rod diameter may be reduced one size for double-rod hangers, to a minimum of 3/8 inch (10 mm).

D. Install hangers for copper tubing with the following maximum horizontal spacing and minimum rod diameters:

1. NPS 3/4 (DN 20) and Smaller: 60 inches (1500 mm) with 3/8-inch (10-mm) rod.

2. NPS 1 and NPS 1-1/4 (DN 25 and DN 32): 72 inches (1800 mm) with 3/8-inch (10-mm) rod.

3. NPS 1-1/2 and NPS 2 (DN 40 and DN 50): 96 inches (2400 mm) with 3/8-inch (10-mm) rod.

F. Support piping and tubing not listed in this article according to MSS SP-58 and manufacturer's written instructions.

3.6 CONNECTIONS

A. Drawings indicate general arrangement of piping, fittings, and specialties.

B. When installing piping adjacent to equipment and machines, allow space for service and maintenance.

C. Connect domestic water piping to exterior water-service piping. Use transition fitting to join dissimilar piping materials.

D. Connect domestic water piping to water-service piping with shutoff valve; extend and connect to the following:

1. Plumbing Fixtures: Cold- and hot-water-supply piping in sizes indicated, but not smaller than that required by plumbing code.

2. Equipment: Cold- and hot-water-supply piping as indicated, but not smaller than equipment connections. Provide shutoff valve and union for each connection. Use flanges instead of unions for NPS 2-1/2 (DN 65) and larger.

3.7 FIELD QUALITY CONTROL

A. Perform the following tests and inspections:

1. Piping Tests:

a. Fill domestic water piping. Check components to determine that they are not air bound and that piping is full of water.

b. Test for leaks and defects in new piping and parts of existing piping that have been altered, extended, or repaired. If testing is performed in segments, submit a separate report for each test, complete with diagram of portion of piping tested.

b. Leave new, altered, extended, or replaced domestic water piping uncovered and unconcealed until it has been tested and approved. Expose work that was covered or concealed before it was tested.

d. Cap and subject piping to static water pressure of 50 psig (345 kPa) above operating pressure, without exceeding pressure rating of piping system materials. Isolate test source and allow it to stand for four hours. Leaks and loss in test pressure constitute defects that must be repaired.

e. Repair leaks and defects with new materials, and retest piping or portion thereof until satisfactory results are obtained.

f. Prepare reports for tests and for corrective action required.

B. Domestic water piping will be considered defective if it does not pass tests and inspections.

3.8 ADJUSTING

A. Perform the following adjustments before operation:

1. Close drain valves, hydrants, and hose bibbs.

2. Open shutoff valves to fully open position.

3. Open throttling valves to proper setting.

4. Remove plugs used during testing of piping and for temporary sealing of piping during installation.

DESIGNED: MLB
DRAWN: MLB
CHECKED: AJP

THIS DRAWING IS BEING MADE AVAILABLE BY SCHEMMER FOR USE ON THIS PROJECT IN ACCORDANCE WITH SCHEMMER'S AGREEMENT FOR PROFESSIONAL SERVICES. SCHEMMER ASSUMES NO RESPONSIBILITY OR LIABILITY FOR ANY USE OF THIS DRAWING OR ANY PART THEREOF EXCEPT IN ACCORDANCE WITH THE TERMS OF THE ABOVE AGREEMENT.

ISSUE DATE: 10/18/2024
REVISIONS:

No.:	DATE:	BY:	DESCRIPTION:

Anthony Pospisil
ANTHONY J. POSPISIL
E-20118
10/18/2024

SCHEMMER
Design with Purpose. Build with Confidence.
1044 North 115th Street, Suite 300, Omaha, Nebraska 68154 | 402.493.4800
CA0666

LANOHA DEVELOPMENT
HAWTHORNE COURT MULTI-TENANT BUILDING
17662 WELCH PLAZA
OMAHA, NE 68154

SHEET SPECIFICATIONS - PLUMBING

PROJECT NO.: 010347.001

P 01

5. Remove and clean strainer screens. Close drain valves and replace drain plugs.
6. Remove filter cartridges from housings and verify that cartridges are as specified for application where used and are clean and ready for use.
7. Check plumbing specialties and verify proper settings, adjustments, and operation.

3.9 CLEANING

A. Clean and disinfect potable domestic water piping as follows:
1. Purge new piping and parts of existing piping that have been altered, extended, or repaired before using.
2. Use purging and disinfecting procedures prescribed by authorities having jurisdiction; if methods are not prescribed, use procedures described in either AWWA C651 or AWWA C652 or follow procedures described below:
a. Flush piping system with clean, potable water until dirty water does not appear at outlets.
b. Fill and isolate system according to either of the following:
1) Fill system or part thereof with water/chlorine solution with at least 50 ppm (50 mg/L) of chlorine. Isolate with valves and allow to stand for 24 hours.
2) Fill system or part thereof with water/chlorine solution with at least 200 ppm (200 mg/L) of chlorine. Isolate and allow to stand for three hours.
c. Flush system with clean, potable water until no chlorine is in water coming from system after the standing time.
d. Repeat procedures if biological examination shows contamination.
e. Submit water samples in sterile bottles to authorities having jurisdiction.

B. Prepare and submit reports of purging and disinfecting activities. Include copies of water-sample approvals from authorities having jurisdiction.
C. Clean interior of domestic water piping system. Remove dirt and debris as work progresses.

3.10 PIPING SCHEDULE

A. Transition and special fittings with pressure ratings at least equal to piping rating may be used in applications below unless otherwise indicated.
B. Flanges and unions may be used for aboveground piping joints unless otherwise indicated.
C. Aboveground domestic water piping, all sizes, shall be one of the following:
1. Hard copper tube, ASTM B 88M, Type B (ASTM B 88, Type L); wrought-copper, solder-joint fittings; and soldered joints.

3.11 VALVE SCHEDULE

A. Drawings indicate valve types to be used. Where specific valve types are not indicated, the following requirements apply:
1. Shutoff Duty: Use ball valves for piping NPS 2 (DN 50) and smaller.
2. Throttling Duty: Use ball valves for piping NPS 2 (DN 50) and smaller.
3. Drain Duty: Hose-end drain valves.
B. Use check valves to maintain correct direction of domestic water flow to and from equipment.

END OF SECTION

SECTION 221119—DOMESTIC WATER PIPING SPECIALTIES

PART 1—GENERAL

1.1 ACTION SUBMITTALS

A. Product Data: For each type of product.

PART 2—PRODUCTS

2.1 GENERAL REQUIREMENTS FOR PIPING SPECIALTIES

A. Potable-water piping and components shall comply with NSF 61 and NSF 14.
B. Comply with NSF 372 for low lead.

2.2 PERFORMANCE REQUIREMENTS

A. Minimum Working Pressure for Domestic Water Piping Specialties: 125 psig (860 kPa) unless otherwise indicated.

2.3 BACKFLOW PREVENTERS

A. Reduced-Pressure-Principle Backflow Preventers:
1. Standard: ASSE 1013.
2. Operation: Continuous-pressure applications.
3. Pressure Loss: 12 psig (83 kPa) maximum, through middle third of flow range.
4. Body: Bronze for NPS 2 (DN 50) and smaller.
5. End Connections: Threaded for NPS 2 (DN 50) and smaller.
6. Configuration: Designed for horizontal, straight-through flow.
7. Accessories:
a. Valves NPS 2 (DN 50) and Smaller: Ball type with threaded ends on inlet and outlet.
b. Air-Gap Fitting: ASME A112.1.2, matching backflow-preventer connection.

2.4 WATER PRESSURE-REDUCING VALVES

A. Water Regulators:
1. Standard: ASSE 1003.
2. Pressure Rating: Initial working pressure of 150 psig (1035 kPa).
3. Body: Bronze for NPS 2 (DN 50) and smaller; cast iron for NPS 2-1/2 and NPS 3 (DN 65 and DN 80).
4. Valves for Booster Heater Water Supply: Include integral bypass.
5. End Connections: Threaded for NPS 2 (DN 50) and smaller; flanged for NPS 2-1/2 and NPS 3 (DN 65 and DN 80).

2.5 STRAINERS FOR DOMESTIC WATER PIPING

A. Y-Pattern Strainers :
1. Pressure Rating: 125 psig (860 kPa) minimum unless otherwise indicated.
2. Body: Bronze for NPS 2 (DN 50) and smaller.
3. End Connections: Threaded for NPS 2 (DN 50) and smaller.
4. Screen: Stainless steel with round perforations unless otherwise indicated.
5. Perforation Size:
Strainers NPS 2 (DN 50) and Smaller: 0.020 inch (0.51 mm).
6. Drain: Factory-installed, hose-end drain valve.

2.6 WALL HYDRANTS

A. Nonfreeze Wall Hydrants:
1. Standard: ASME A112.21.3M for concealed-outlet, self-draining wall hydrants.
2. Pressure Rating: 125 psig (860 kPa).
3. Operation: Loose key.
4. Casing and Operating Rod: Of length required to match wall thickness. Include wall clamp.
5. Inlet: NPS 3/4 or NPS 1 (DN 20 or DN 25).
6. Outlet: Concealed, with integral vacuum breaker and garden-hose thread complying with ASME B1.20.7.
7. Box: Deep, flush mounted with cover.
8. Box and Cover Finish: Polished nickel bronze.
9. Outlet: Exposed, with integral vacuum breaker and garden-hose thread complying with ASME B1.20.7.

2.10 DRAIN VALVES

A. Ball-Valve-Type, Hose-End Drain Valves:
1. Standard: MSS SP-110 for standard-port, two-piece ball valves.
2. Pressure Rating: 400-psig (2760-kPa) minimum CWP.
3. Size: NPS 3/4 (DN 20).
4. Body: Copper alloy.
5. Ball: Chrome-plated brass.
6. Seats and Seals: Replaceable.
7. Handle: Vinyl-covered steel.
8. Inlet: Threaded or solder joint.
9. Outlet: Threaded, short nipple with garden-hose thread complying with ASME B1.20.7 and cap with brass chain.

PART 3—EXECUTION

3.1 INSTALLATION

A. Backflow Preventers: Install backflow preventers in each water supply to mechanical equipment and systems and to other equipment and water systems that may be sources of contamination. Comply with authorities having jurisdiction.
1. Locate backflow preventers in same room as connected equipment or system.
2. Install drain for backflow preventers with atmospheric-vent drain connection with air-gap fitting, fixed air-gap fitting, or equivalent positive pipe separation of at least two pipe diameters in drain piping and pipe-to-floor drain. Locate air-gap device attached to or under backflow preventer. Simple air breaks are unacceptable for this application.
3. Do not install bypass piping around backflow preventers.
B. Water Regulators: Install with inlet and outlet shutoff valves. Install pressure gauges on inlet and outlet.
C. Balancing Valves: Install in locations where they can easily be adjusted.

3.2 CONNECTIONS

A. Drawings indicate general arrangement of piping, fittings, and specialties.
B. When installing piping specialties adjacent to equipment and machines, allow space for service and maintenance.

3.3 IDENTIFICATION

A. Plastic Labels for Equipment: Install engraved plastic-laminate equipment nameplate or sign on or near each of the following:
1. Pressure vacuum breakers.
B. Distinguish among multiple units, inform operator of operational requirements, indicate safety and emergency precautions, and warn of hazards and improper operations, in addition to identifying unit.

3.4 ADJUSTING

A. Set field-adjustable pressure set points of water pressure-reducing valves.

END OF SECTION

SECTION 221316—SANITARY WASTE AND VENT PIPING

PART 1—GENERAL

1.1 ACTION SUBMITTALS

A. Product Data: For each type of product.

PART 2—PRODUCTS

2.1 PERFORMANCE REQUIREMENTS

A. Components and installation shall be capable of withstanding the following minimum working pressure unless otherwise indicated:
1. Soil, Waste, and Vent Piping: 10-foot head of water (30 kPa).

2.2 PIPING MATERIALS

A. Piping materials shall bear label, stamp, or other markings of specified testing agency.
B. Comply with requirements in "Piping Schedule" Article for applications of pipe, tube, fitting materials, and joining methods for specific services, service locations, and pipe sizes.

2.3 HUB-AND-SPIGOT, CAST-IRON SOIL PIPE AND FITTINGS

A. Pipe and Fittings: ASTM A 74, Service class(es).
B. Gaskets: ASTM C 564, rubber.
C. Calking Materials: ASTM B 29, pure lead and oakum or hemp fiber.

2.4 HUBLESS, CAST-IRON SOIL PIPE AND FITTINGS

A. Pipe and Fittings: ASTM A 888 or CISPI 301.
B. CISPI, Hubless-Piping Couplings:
1. Standards: ASTM C 1277 and CISPI 310.
2. Description: Stainless-steel corrugated shield with stainless-steel bands and tightening devices; and ASTM C 564, rubber sleeve with integral, center pipe stop.

2.5 SPECIALTY PIPE FITTINGS

A. Transition Couplings:
1. Fitting-Type Transition Couplings: Manufactured piping coupling or specified piping system fitting.
2. Unshielded, Nonpressure Transition Couplings:
a. Standard: ASTM C 1173.
b. Description: Elastomeric, sleeve-type, reducing or transition pattern. Include shear ring and corrosion-resistant-metal tension band and tightening mechanism on each end.
c. End Connections: Same size as and compatible with pipes to be joined.
d. Sleeve Materials:
1) For Cast-Iron Soil Pipes: ASTM C 564, rubber.
2) For Plastic Pipes: ASTM F 477, elastomeric seal or ASTM D 5926, PVC.
3) For Dissimilar Pipes: ASTM D 5926, PVC or other material compatible with pipe materials being joined.
3. Shielded, Nonpressure Transition Couplings:
a. Standard: ASTM C 1460.
b. Description: Elastomeric or rubber sleeve with full-length, corrosion-resistant outer shield and corrosion-resistant-metal tension band and tightening mechanism on each end.
c. End Connections: Same size as and compatible with pipes to be joined.
4. Pressure Transition Couplings:
a. Standard: AWWA C219.
b. Description: Metal, sleeve-type same size as, with pressure rating at least equal to, and ends compatible with, pipes to be joined.
c. Gasket Material: Natural or synthetic rubber.
d. Metal Component Finish: Corrosion-resistant coating or material.

PART 3—EXECUTION

3.1 PIPING INSTALLATION

A. Drawing plans, schematics, and diagrams indicate general location and arrangement of piping systems.
1. Indicated locations and arrangements were used to size pipe and calculate friction loss, expansion, pump sizing, and other design considerations.
2. Install piping as indicated unless deviations to layout are approved on coordination drawings.
B. Install piping in concealed locations unless otherwise indicated and except in equipment rooms and service areas.
C. Install piping indicated to be exposed and piping in equipment rooms and service areas at right angles or parallel to building walls. Diagonal runs are prohibited unless specifically indicated otherwise.
D. Install piping above accessible ceilings to allow sufficient space for ceiling panel removal.
E. Install piping at indicated slopes.
F. Install piping free of sags and bends.
G. Install fittings for changes in direction and branch connections.
H. Install piping to allow application of insulation.
I. Make changes in direction for soil and waste drainage and vent piping using appropriate branches, bends, and long-sweep bends.
1. Sanitary tees and short-sweep 1/4 bends may be used on vertical stacks if change in direction of flow is from horizontal to vertical.
2. Use long-turn, double Y-branch and 1/8-bend fittings if two fixtures are installed back to back or side by side with common drain pipe.
a. Straight tees, elbows, and crosses may be used on vent lines.
3. Do not change direction of flow more than 90 degrees.
4. Use proper size of standard increasers and reducers if pipes of different sizes are connected.
a. Reducing size of waste piping in direction of flow is prohibited.
J. Lay buried building waste piping beginning at low point of each system.
1. Install true to grades and alignment indicated, with unbroken continuity of invert. Place hub ends of piping upstream.
2. Install required gaskets according to manufacturer's written instructions for use of lubricants, cements, and other installation requirements.
3. Maintain swab in piping and pull past each joint as completed.
K. Install soil and waste and vent piping at the following minimum slopes unless otherwise indicated:
1. Building Sanitary Waste: 2 percent downward in direction of flow for piping NPS 3 (DN 80) and smaller; 1 percent downward in direction of flow for piping NPS 4 (DN 100) and larger.
2. Horizontal Sanitary Waste Piping: 2 percent downward in direction of flow.
3. Vent Piping: 1 percent down toward vertical fixture vent or toward vent stack.
L. Install cast-iron soil piping according to CISPI's "Cast Iron Soil Pipe and Fittings Handbook," Chapter IV, "Installation of Cast Iron Soil Pipe and Fittings."

3.2 JOINT CONSTRUCTION

A. Join hub-and-spigot, cast-iron soil piping with gasket joints according to CISPI's "Cast Iron Soil Pipe and Fittings Handbook" for compression joints.
B. Join hubless, cast-iron soil piping according to CISPI 310 and CISPI's "Cast Iron Soil Pipe and Fittings Handbook" for hubless-piping coupling joints.
C. Threaded Joints: Thread pipe with tapered pipe threads according to ASME B1.20.1.
1. Cut threads full and clean using sharp dies.
2. Ream threaded pipe ends to remove burrs and restore full ID. Join pipe fittings and valves as follows:
a. Apply appropriate tape or thread compound to external pipe threads unless dry seal threading is specified.
b. Damaged Threads: Do not use pipe or pipe fittings with threads that are corroded or damaged.
c. Do not use pipe sections that have cracked or open welds.

3.3 SPECIALTY PIPE FITTING INSTALLATION

A. Transition Couplings:
1. Install transition couplings at joints of piping with small differences in ODs.
2. In Waste Drainage Piping: Unshielded, nonpressure transition couplings.
3. In Aboveground Force Main Piping: Fitting-type transition couplings.
B. Dielectric Fittings:
1. Install dielectric fittings in piping at connections of dissimilar metal piping and tubing.
2. Dielectric Fittings for NPS 2 (DN 50) and Smaller: Use dielectric nipples.
3. Dielectric Fittings for NPS 2-1/2 to NPS 4 (DN 65 to DN 100): Use dielectric flange kits.
4. Dielectric Fittings for NPS 5 (DN 125) and Larger: Use dielectric flange kits.

3.4 HANGER AND SUPPORT INSTALLATION

A. Comply with requirements for pipe hanger and support devices and installation specified in Section 220529 "Hangers and Supports for Plumbing Piping and Equipment."
1. Install galvanized steel pipe hangers for horizontal piping in noncorrosive environments.
2. Install stainless-steel pipe hangers for horizontal piping in corrosive environments.
3. Install galvanized steel pipe support clamps for vertical piping in noncorrosive environments.
4. Install stainless-steel pipe support clamps for vertical piping in corrosive environments.
5. Vertical Piping: MSS Type 8 or Type 42, clamps.
6. Install individual, straight, horizontal piping runs:
100 Feet (30 m) and Less: MSS Type 1, adjustable, steel clevis hangers.
Longer Than 100 Feet (30 m): MSS Type 43, adjustable roller hangers.
7. Multiple, Straight, Horizontal Piping Runs 100 Feet (30 m) or Longer: MSS Type 44, pipe rolls. Support pipe rolls on trapeze.
8. Base of Vertical Piping: MSS Type 52, spring hangers.
B. Support horizontal piping and tubing within 12 inches (300 mm) of each fitting, valve, and coupling.
C. Support vertical piping and tubing at base and at each floor.
D. Rod diameter may be reduced one size for double-rod hangers, with 3/8-inch (10-mm) minimum rods.
E. Install hangers for cast-iron soil piping with the following maximum horizontal spacing and minimum rod diameters:
1. NPS 1-1/2 and NPS 2 (DN 40 and DN 50): 60 inches (1500 mm) with 3/8-inch (10-mm) rod.
2. NPS 3 (DN 80): 60 inches (1500 mm) with 1/2-inch (13-mm) rod.
3. NPS 4 and NPS 5 (DN 100 and DN 125): 60 inches (1500 mm) with 5/8-inch (16-mm) rod.
F. Install supports for vertical cast-iron soil piping every 15 feet (4.5 m).
G. Install hangers for steel piping with the following maximum horizontal spacing and minimum rod diameters:
1. NPS 1-1/4 (DN 32): 84 inches (2100 mm) with 3/8-inch (10-mm) rod.
2. NPS 1-1/2 (DN 40): 108 inches (2700 mm) with 3/8-inch (10-mm) rod.
3. NPS 2 (DN 50): 10 feet (3 m) with 3/8-inch (10-mm) rod.
H. Install supports for vertical steel piping every 15 feet (4.5 m).
I. Support piping and tubing not listed above according to MSS SP-58 and manufacturer's written instructions.

3.5 CONNECTIONS

A. Drawings indicate general arrangement of piping, fittings, and specialties.
B. Connect soil and waste piping to exterior sanitary sewerage piping. Use transition fitting to join dissimilar piping materials.
C. Connect waste and vent piping to the following:
1. Plumbing Fixtures: Connect waste piping in sizes indicated, but not smaller than required by plumbing code.
2. Plumbing Fixtures and Equipment: Connect atmospheric vent piping in sizes indicated, but not smaller than required by authorities having jurisdiction.
3. Plumbing Specialties: Connect waste and vent piping in sizes indicated, but not smaller than required by plumbing code.
4. Install test tees (wall cleanouts) in conductors near floor and floor cleanouts with cover flush with floor.
5. Comply with requirements for cleanouts and drains specified in Section 221319 "Sanitary Waste Piping Specialties."
6. Equipment: Connect waste piping as indicated.
a. Provide shutoff valve if indicated and union for each connection.
b. Use flanges instead of unions for connections NPS 2-1/2 (DN 65) and larger.
D. Where installing piping adjacent to equipment, allow space for service and maintenance of equipment.
E. Make connections according to the following unless otherwise indicated:
1. Install unions, in piping NPS 2 (DN 50) and smaller, adjacent to each valve and at final connection to each piece of equipment.
2. Install flanges, in piping NPS 2-1/2 (DN 65) and larger, adjacent to flanged valves and at final connection to each piece of equipment.

3.6 IDENTIFICATION

A. Identify exposed sanitary waste and vent piping.

3.7 FIELD QUALITY CONTROL

A. Test sanitary waste and vent piping according to procedures of authorities having jurisdiction or, in absence of published procedures, as follows:
1. Test for leaks and defects in new piping and parts of existing piping that have been altered, extended, or repaired.
a. If testing is performed in segments, submit separate report for each test, complete with diagram of portion of piping tested.
2. Leave uncovered and unconcealed new, altered, extended, or replaced waste and vent piping until it has been tested and approved.
a. Expose work that was covered or concealed before it was tested.
3. Roughing-in Plumbing Test Procedure: Test waste and vent piping except outside leaders on completion of roughing-in.
a. Close openings in piping system and fill with water to point of overflow, but not less than 10-foot head of water (30 kPa).
b. From 15 minutes before inspection starts to completion of inspection, water level must not drop.
c. Inspect joints for leaks.
4. Repair leaks and defects with new materials and retest piping, or portion thereof, until satisfactory results are obtained.
5. Prepare reports for tests and required corrective action.

3.8 PIPING SCHEDULE

A. Flanges and unions may be used on aboveground pressure piping unless otherwise indicated.
B. Aboveground, vent piping, any size shall be any of the following:
1. Service class, cast-iron soil pipe and fittings; gaskets; and gasketed joints.
2. Hubless, cast-iron soil pipe and fittings; CISPI hubless-piping couplings; and coupled joints.
3. Dissimilar Pipe-Material Couplings: Shielded, nonpressure transition couplings.
C. Underground, soil, waste, and vent piping, any size shall be the following:
1. Service class, cast-iron soil piping; gaskets; and gasketed joints.
2. Dissimilar Pipe-Material Couplings: Unshielded, nonpressure transition couplings.

END OF SECTION

SECTION 221319—SANITARY WASTE PIPING SPECIALTIES

PART 1—GENERAL

1.1 ACTION SUBMITTALS

A. Product Data: For each type of product.

PART 2—PRODUCTS

2.1 ASSEMBLY DESCRIPTIONS

A. Sanitary waste piping specialties shall bear label, stamp, or other markings of specified testing agency.
B. Comply with NSF 14 for plastic sanitary waste piping specialty components.

2.2 FLOOR DRAINS

A. Cast-Iron Floor Drains:
1. See plans for individual product requirements.

2.3 CLEANOUTS

A. Cast-Iron Exposed Floor Cleanouts:
1. Standard: ASME A112.36.2M for threaded, adjustable housing cleanout.
2. Size: Same as connected branch.
3. Type: Threaded, adjustable housing.
4. Body or Ferrule: Cast iron.
5. Clamping Device: Not required.
6. Outlet Connection: Match piping.
7. Closure: Brass plug with tapered threads.
8. Adjustable Housing Material: Cast iron with threads.
9. Frame and Cover Material and Finish: Nickel-bronze, copper alloy.
10. Frame and Cover Shape: Round.
11. Top Loading Classification: Medium Duty.
12. Riser: ASTM A 74, Service class, cast-iron drainage pipe fitting and riser to cleanout.

2.6 MISCELLANEOUS SANITARY DRAINAGE PIPING SPECIALTIES

A. Air-Gap Fittings:
1. Standard: ASME A112.1.2, for fitting designed to ensure fixed, positive air gap between installed inlet and outlet piping.
2. Body: Bronze or cast iron.
3. Inlet: Opening in top of body.
4. Outlet: Larger than inlet.
5. Size: Same as connected waste piping and with inlet large enough for associated indirect waste piping.

PART 3—EXECUTION

3.1 INSTALLATION

A. Install floor drains at low points of surface areas to be drained. Set grates of drains flush with finished floor, unless otherwise indicated.
1. Position floor drains for easy access and maintenance.
2. Set floor drains below elevation of surrounding finished floor to allow floor drainage.
3. Set with grates depressed according to the following drainage area radii:
a. Radius, 30 Inches (750 mm) or Less: Equivalent to 1 percent slope, but not less than 1/4-inch (6.35-mm) total depression.
b. Radius, 30 to 60 Inches (750 to 1500 mm): Equivalent to 1 percent slope.
c. Radius, 60 Inches (1500 mm) or Larger: Equivalent to 1 percent slope, but not greater than 1-inch (25-mm) total depression.
4. Install floor-drain flashing collar or flange, so no leakage occurs between drain and adjoining flooring.
a. Maintain integrity of waterproof membranes where penetrated.
5. Install individual traps for floor drains connected to sanitary building drain, unless otherwise indicated.
B. Install cleanouts in aboveground piping and building drain piping according to the following, unless otherwise indicated:
1. Size same as drainage piping up to NPS 4 (DN 100). Use NPS 4 (DN 100) for larger drainage piping unless larger cleanout is indicated.
2. Locate at each change in direction of piping greater than 45 degrees.
3. Locate at minimum intervals of 50 feet (15 m) for piping NPS 4 (DN 100) and smaller and 100 feet (30 m) for larger piping.
4. Locate at base of each vertical soil and waste stack.
C. For floor cleanouts for piping below floors, install cleanout deck plates with top flush with finished floor.
D. Install air-gap fittings on draining-type backflow preventers and on indirect-waste piping discharge into sanitary drainage system.
E. Install traps on plumbing specialty drain outlets. Omit traps on indirect wastes unless trap is indicated.

3.2 LABELING AND IDENTIFYING

A. Distinguish among multiple units, inform operator of operational requirements, indicate safety and emergency precautions, and warm of hazards and improper operations, in addition to identifying unit.

END OF SECTION

DESIGNED: MLB
DRAWN: MLB
CHECKED: AJP

ISSUE DATE: 10/18/2024
REVISIONS:

No.:	DATE:	BY:	DESCRIPTION:

THIS DRAWING IS BEING MADE AVAILABLE BY SCHEMMER ON THIS PROJECT IN ACCORDANCE WITH STATE LAW. PROFESSIONAL SERVICES PERFORMED ARE SOLELY RESPONSIBILITY OF LIABILITY OF THE ENGINEER OF THIS DRAWING OR ANY PART THEREOF ARE LIMITED IN ACCORDANCE WITH THE PROFESSIONAL SERVICE AGREEMENT.

PROFESSIONAL MECHANICAL ENGINEER
ANTHONY J. POSPISIL
E-20118
STATE OF NEBRASKA
10/18/2024

SCHEMMER
Design with Purpose. Build with Confidence.
1044 North 115th Street, Suite 300, Omaha, Nebraska 68154 | 402.493.4800
CA0666

LANOHA DEVELOPMENT
HAWTHORNE COURT MULTI-TENANT BUILDING
17662 WELCH PLAZA
OMAHA, NE 68154

SHEET SPECIFICATIONS - PLUMBING

PROJECT NO.: 010347.001

P 02

C:\Users\mbecksmann\Documents\Revit_temp\010347001-MECH_R23_mbecksmann@schemmer.com.rvt
10/18/2024 2:28:11 PM

REF. NOTES (X):

1	THIS SPACE IS RESERVED FOR DOMESTIC WATER SERVICE.

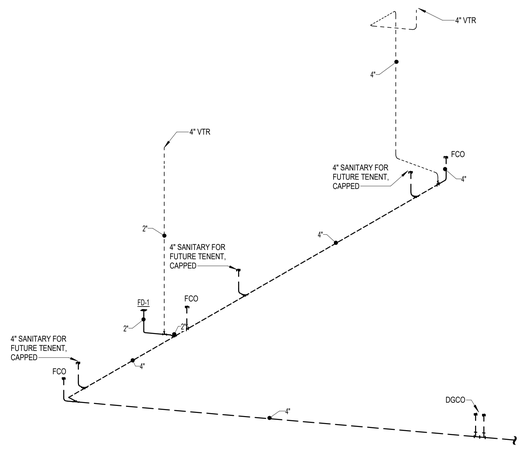

2 SANITARY RISER DIAGRAM - PLUMBING
SCALE:

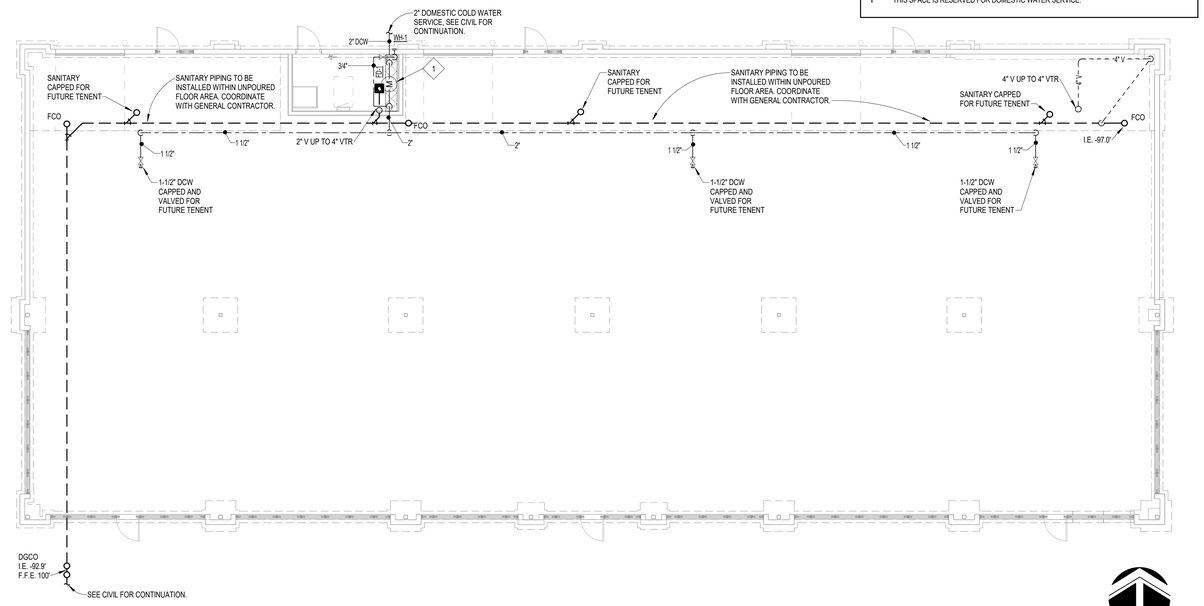

1 FIRST FLOOR PLAN - PLUMBING
SCALE: 1/8" = 1'-0"

NORTH

PLUMBING FIXTURE SCHEDULE

MARK	DESCRIPTION	FIXTURE CONNECTIONS					MOUNTING HEIGHT	FLOW RATE	MANUFACTURER AND MODEL NUMBER				
		HOT WATER	COLD WATER	WASTE	VENT	OTHER			FIXTURE	FAUCET/FLUSH VALVE	ACCESSORY #1	ACCESSORY #2	REMARKS
FD-1	FLOOR DRAIN WITH 5" STRAINER	---	---	2"	2"	---	FLOOR	---	JAY R. SMITH 2005YA	---	---	---	1
WH-1	WALL HYDRANT, FREEZELESS	---	3/4"	---	---	---	18" A.F.F.	2.25 GPM	WOODFORD B65	---	---	---	---

NOTES: 1. PROVIDE NICKLE-BRONZE STRAINER.

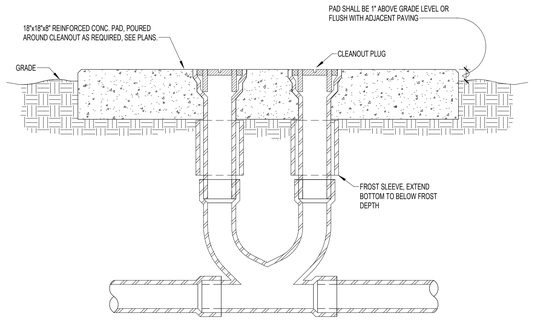

3 DOUBLE GRADE CLEANOUT DETAIL
SCALE: NOT TO SCALE

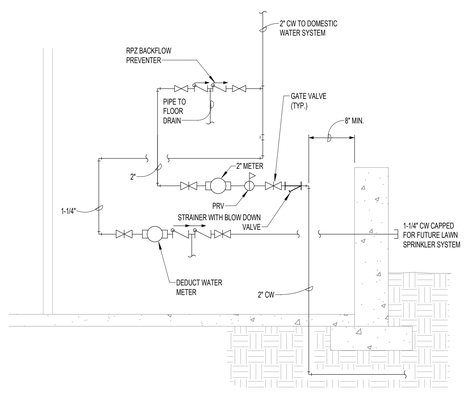

4 DOMESTIC WATER SERVICE PIPING SCHEMATIC
SCALE: NOT TO SCALE

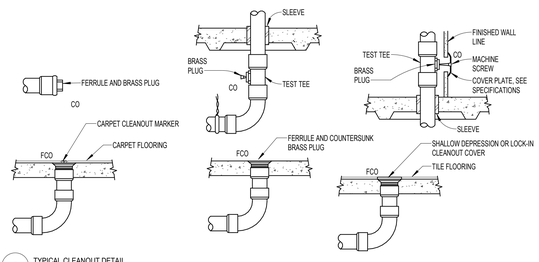

5 TYPICAL CLEANOUT DETAIL
SCALE: NOT TO SCALE

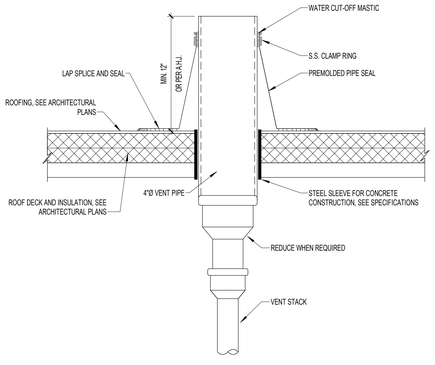

6 VENT THRU ROOF DETAIL
SCALE: NOT TO SCALE

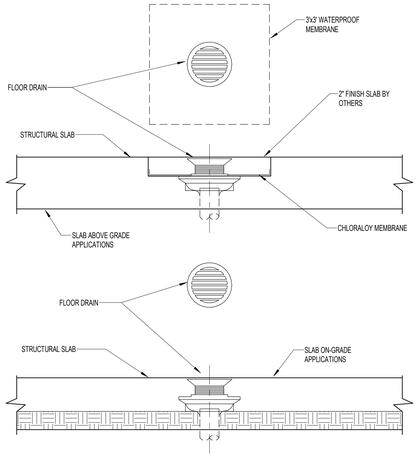

7 FLOOR DRAIN DETAIL
SCALE: NOT TO SCALE

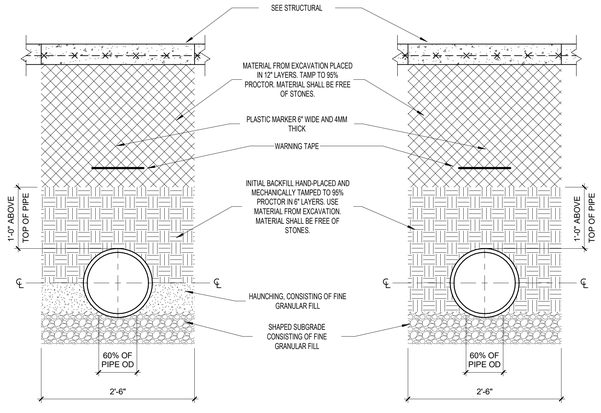

BEDDING FOR PLASTIC PIPE

BEDDING FOR METALLIC PIPE

8 BEDDING FOR SANITARY PIPING
SCALE: NOT TO SCALE

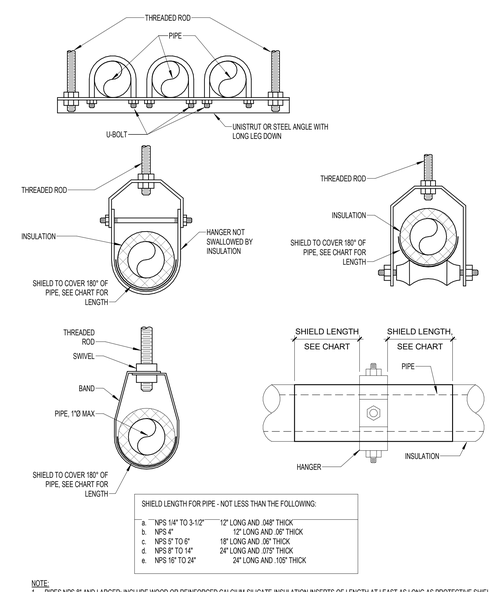

SHIELD LENGTH FOR PIPE - NOT LESS THAN THE FOLLOWING:

a.	NPS 1/4" TO 3-1/2"	12" LONG AND .048" THICK
b.	NPS 4"	12" LONG AND .06" THICK
c.	NPS 5" TO 6"	18" LONG AND .06" THICK
d.	NPS 8" TO 14"	24" LONG AND .075" THICK
e.	NPS 16" TO 24"	24" LONG AND .105" THICK

NOTE:
1. PIPES NPS 8" AND LARGER: INCLUDE WOOD OR REINFORCED CALCIUM-SILICATE-INSULATION INSERTS OF LENGTH AT LEAST AS LONG AS PROTECTIVE SHIELD.
2. THERMAL-HANGER SHIELDS: INSTALL WITH INSULATION SAME THICKNESS AS PIPING INSULATION.

9 PIPE HANGER DETAIL
SCALE: NOT TO SCALE

DESIGNED: MLB
DRAWN: MLB
CHECKED: AJP
ISSUE DATE: 10/18/2024
REVISIONS:
No.: DATE: BY: DESCRIPTION:

THIS DRAWING IS BEING MADE AVAILABLE BY SCHEMMER FOR REVIEW ON THIS PROJECT IN ACCORDANCE WITH THE TERMS OF PROFESSIONAL SERVICES AGREEMENT. SCHEMMER DISCLAIMS ANY RESPONSIBILITY OR LIABILITY FOR ANY USE OF THIS DRAWING OR ANY PART THEREOF EXCEPT IN ACCORDANCE WITH THE TERMS OF SUCH AGREEMENT.

PROFESSIONAL MECHANICAL ENGINEER ANTHONY J. POSPISIL E-20118 STATE OF NEBRASKA
10/18/2024

SCHEMMER
Design with Purpose. Build with Confidence.
1044 North 115th Street, Suite 300, Omaha, Nebraska 68154 | 402.493.4800
CA0666

LANOHA DEVELOPMENT
HAWTHORNE COURT MULTI-TENANT BUILDING
17662 WELCH PLAZA
OMAHA, NE 68154

FLOOR PLAN, DETAILS, & SCHEDULES - PLUMBING

PROJECT NO.: 010347.001

P101

C:\Users\mbeckmann\Documents\Revit_temp\010347001-MECH_R23_mbeckmann@schemmer.com.rvt
10/16/2024 2:28:13 PM

SYMBOL LEGEND

HVAC PIPING

LPS	LOW PRESSURE STEAM
LPR	LOW PRESSURE RETURN
MPS	MEDIUM PRESSURE STEAM
MPR	MEDIUM PRESSURE RETURN
HPS	HIGH PRESSURE STEAM
HPR	HIGH PRESSURE RETURN
PC	PUMPED CONDENSATE
HWS	HOT WATER SUPPLY
HWR	HOT WATER RETURN
HPWS	HEAT PUMP WATER SUPPLY
HPWR	HEAT PUMP WATER RETURN
GHWS	GLYCOL HOT WATER SUPPLY
GHWR	GLYCOL HOT WATER RETURN
BBD	BOILER BLOW DOWN
ES	EXHAUST STEAM
CWS	CHILLED WATER SUPPLY
CWR	CHILLED WATER RETURN
GCWS	GLYCOL CHILLED WATER SUPPLY
GCWR	GLYCOL CHILLED WATER RETURN
RL	REFRIGERANT LIQUID LINE
RS	REFRIGERANT SUCTION LINE
RDL	REFRIGERANT DISCHARGE
CS	CONDENSER WATER SUPPLY
CR	CONDENSER WATER RETURN
HCWS	HOTICHILLED WATER SUPPLY
HCWR	HOTICHILLED WATER RETURN
CD	CONDENSATE DRAIN
G	NATURAL GAS
FOS	FUEL OIL SUPPLY
FOR	FUEL OIL RETURN
FOV	FUEL OIL VENT
FOF	FUEL OIL FILL
FOG	FUEL OIL GAGE
LPG	LIQUEFIED PETROLEUM GAS

PLUMBING PIPING

	SANITARY DRAIN (ABOVE FLOOR)
	SANITARY DRAIN (BELOW FLOOR)
GW	SANITARY GREASE WASTE
ST/OST	STORM DRAIN
ST/OST	STORM DRAIN (BELOW FLOOR)
	SANITARY VENT
AW	ACID WASTE
AV	ACID VENT
	DOMESTIC COLD WATER (DCW)
	DOMESTIC HOT WATER (DHW)
	DOMESTIC HOT WATER RECIRCULATING (DHWR)
TW	TEPID WATER
TWR	TEPID WATER RECIRCULATING
DSCW	SOFTENED COLD WATER
DSHW	SOFTENED HOT WATER
W	BURIED EXTERIOR WATER
DS	DISTILLED WATER
DI	DEIONIZED WATER
RO	REVERSE OSMOSIS WATER
A	COMPRESSED AIR
VAC	VACUUM
OX	OXYGEN
N	NITROGEN
WAGO	WASTE AND ANESTHETIC GAS DISPOSAL
MA	MEDICAL AIR

FIRE PROTECTION

D	SPRINKLER DRAIN
F	FIRE SUPPRESSION PIPING
	FIRE DEPARTMENT CONNECTION
FS	FLOW SWITCH
TS	TAMPER SWITCH

VALVES

	MANUAL BALANCING VALVE
	ISOLATION VALVE
	CHECK VALVE
M	CONTROL VALVE (2 WAY)
M	CONTROL VALVE (3 WAY)
	AUTO FLOW CONTROL VALVE
	HOSE END DRAIN VALVE
	PRESSURE REDUCING VALVE
S	SOLENOID VALVE
	TEMP & PRESS RELIEF (OR) SAFETY VALVE-STEAM
	THERMOSTATIC MIXING VALVE

PIPING SPECIALTIES AND FITTINGS

CO — WCO	CLEANOUT / WALL CLEANOUT
GCO	GRADE CLEANOUT
DGCO	DOUBLE - GRADE CLEANOUT
VTR	PLUMBING VENT THRU ROOF
FD_	FLOOR DRAIN
FS_	FLOOR SINK
RD_	ROOF DRAIN
ORD_	OVERFLOW ROOF DRAIN
	TRENCH DRAIN
MH	MANHOLE
	OXYGEN OUTLET
	VACUUM OUTLET
	AIR OUTLET
	NITROGEN OUTLET
	WASTE AND ANESTHETIC GAS DISPOSAL OUTLET
MA	MEDICAL AIR OUTLET
	PIPE CAP
	ELBOW UP
	ELBOW DOWN
	TEE
	TEE UP
	TEE DOWN
	STRAINER
	UNION
	AIR VENT
	FLEXIBLE PIPE CONNECTION
	EXPANSION JOINT
	PIPE ANCHOR
	PIPE GUIDE
	THERMOMETER
	PRESSURE GAUGE
HB	HOSE BIBB
RHY	ROOF HYDRANT
WH	WALL HYDRANT
	STEAM TRAP

MISCELLANEOUS SYMBOLS

DEMO EXISTING	DEMO TO EXISTING CONNECTION
NEW EXISTING	NEW TO EXISTING CONNECTION

HVAC DUCTWORK AND SPECIALTIES

18x10	RECT DUCT-1ST FIG IS SIDE SHOWN
18 Ø	ROUND DUCT
18/10	FLAT OVAL DUCT-1ST FIG IS SIDE SHOWN
	ACOUSTICAL DUCT LINER

HVAC DUCTWORK AND SPECIALTIES (CONT.)

	FLEXIBLE DUCTWORK CONNECTION
	VOLUME DAMPER
	TURNING VANES
	HIGH EFFICIENCY TAKEOFF
	HIGH EFFICIENCY TAKOFF WITH VOLUME DAMPER
	SUPPLY AND FRESH AIR DUCT UP
	SUPPLY AND FRESH AIR DUCT DOWN
	RETURN DUCT UP
	RETURN DUCT DOWN
	EXHAUST DUCT UP
	EXHAUST DUCT DOWN
	ROUND DUCT UP / DOUBLE LINE PIPE
	ROUND DUCT DOWN / DOUBLE LINE PIPE
SIZE/TYPE FLOW	AIR TERMINAL (VERTICAL MOUNTING)
SIZE/TYPE FLOW	ROUND AIR TERMINAL (HORIZONTAL MOUNTING)
SIZE/TYPE FLOW	RECTANGULAR SUPPLY AIR TERMINAL (HORIZONTAL MOUNTING)
SIZE/TYPE FLOW	RECTANGULAR RETURN AIR TERMINAL (HORIZONTAL MOUNTING)
SIZE/TYPE FLOW	RECTANGULAR EXHAUST AIR TERMINAL (HORIZONTAL MOUNTING)
AFS	AIR FLOW STATION
	MOTORIZED DAMPER-PARALLEL BLADE
	MOTORIZED DAMPER-OPPOSED BLADE
	GRAVITY DAMPER
F	FIRE DAMPER-HORIZ FIRE SEPARATION
S	SMOKE DAMPER
FS	FIRESMOKE DAMPER
	FLEXIBLE DUCT
T	THERMOSTAT
H	HUMIDISTAT
T	TEMPERATURE SENSOR
CO	CARBON MONOXIDE SENSOR
CO2	CARBON DIOXIDE SENSOR
NO2	NITROGEN DIOXIDE SENSOR
X	SENSOR WITH GUARD

REFERENCE LEGEND

DUCT SIZE	X" Ø — DIAMETER; X"x" — WIDTH x HEIGHT; X"/x" — WIDTH / HEIGHT
PIPE SIZE	X" — PIPE SIZE (DIAMETER)
PLUMBING FIXTURES	XXX-1 — PLUMBING FIXTURE DESIGNATION
ROOM / SPACE NUMBER	ROOM NAME — ROOM NAME DESIGNATION; 101 — ROOM NUMBER DESIGNATION
EQUIPMENT NUMBER	XX-1 — EQUIPMENT NUMBER
REFERENCE DEMOLITION NOTE	X — DEMOLITION DESIGNATION
REFERENCE NOTE	X — REFERENCE DESIGNATION
PLAN DETAIL	X — DETAIL NUMBER; XXXX — SHEET NUMBER
SECTION/ DETAIL	SIM/OPP; X — SECTION/DETAIL NUMBER; XXXX — SHEET NUMBER; INDICATES DIRECTION OF VIEW
NEW COLUMN	X — LETTER/NUMBER INDICATES NEW COLUMN LINE
EXISTING COLUMN	X — LETTER/NUMBER INDICATES EXISTING COLUMN LINE
MATCHLINE	AREA A / AREA B
LEVEL	LEVEL CALLOUT DESIGNATION; NAME ELEVATION; ELEVATION DESIGNATION
TITLE MARKER	GRAPHIC AREA FOR DRAWING; DRAWING/DETAIL NUMBER; VIEW NAME — TITLE; SCALE: 1/8" = 1'-0" — SCALE OF THE DRAWING
NORTH ARROW	NORTH; PLAN NORTH; TRUE NORTH

ABBREVIATIONS

A	COMPRESSED AIR
AC	AIR COMPRESSOR
ACC	AIR COOLED CONDENSER
ACCU	AIR COOLED CONDENSING UNIT
AD	AIR DOOR
AFCV	AUTO FLOW CONTROL VALVE
AHU	AIR HANDLING UNIT
AMP	AMPERE
APD	AIR PRESSURE DROP
ARU	AIR ROTATION UNIT
AS	AIR SEPARATOR
ASHP	AIR SOURCE HEAT PUMP
AV	ACID VENT
AW	ACID WASTE
B	BOILER
BC	BLOWER COIL
BD	BIDET
BFP	BACKFLOW PREVENTER
BFV	BUTTERFLY VALVE
BHP	BRAKE HORSEPOWER
BLKG	BLOCKING
BLV	BALANCING VALVE
BS	BRANCH SELECTOR BOX
BT	BATHTUB
BV	BAILL VALVE
BW	BEDPAN WASHER
CH	CHILLER
CC	COOLING COIL
CD	CONDENSATE DRAIN
CFM	CUBIC FEET PER MINUTE
CI	CAST IRON
CMU	CONCRETE MASONRY UNITS
CR	CONDENSER WATER RETURN
CRAC	COMPUTER ROOM AIR CONDITIONER
CS	CONDENSER WATER SUPPLY
CSS	CLINICAL SERVICE SINKS
CT	COOLING TOWER
CU	CONDENSING UNIT - SPLIT SYSTEM
CUH	CABINET UNIT HEATER
CWR	CHILLED WATER RETURN
CWS	CHILLED WATER SUPPLY
CWP	CHILLED WATER PUMP
DB	DRY-BULB TEMPERATURE
DCW	DOMESTIC COLD WATER
DEG	DEGREE
DF	DRINKING FOUNTAIN
DGCO	DOUBLE GRADE CLEANOUT
DH	EMERGENCY DRENCH HOSES
DHW	DOMESTIC HOT WATER
DHWR	DOMESTIC HOT WATER RECIRCULATING
DHWP	DOMESTIC HOT WATER RECIRCULATING PUMP
DI	DEIONIZED WATER
DOAS	DEDICATED OUTDOOR AIR SYSTEM
DS	DISTILLED WATER
DSA	DUCT SOUND ATTENUATORS
DSCW	DOMESTIC SOFT COLD WATER
DSHW	DOMESTIC SOFT HOT WATER
DSHWR	DOMESTIC SOFT HOT WATER RECIRCULATING
DSS	DUCTLESS SPLIT SYSTEM
DST	DOMESTIC STORAGE TANK
DTW	DOMESTIC TEPID WATER
DTWR	DOMESTIC TEPID WATER RECIRCULATING
DWET	DOMESTIC WATER EXPANSION TANK
EA	EACH
EA	EXHAUST AIR
EAT	ENTERING AIR TEMPERATURE
EDH	ELECTRIC DUCT HEATER
EEW	EMERGENCY EYE WASH
EEWS	EMERGENCY EYE WASHSHOWER
EF	EXHAUST FAN
EFF	EFFICIENCY
EFW	EMERGENCY FACE WASH
EH	EXHAUST HOOD
ERV	ENERGY RECOVERY VENTILATOR
ES	EMERGENCY SHOWER
ESP	EXTERNAL STATIC PRESSURE
ET	EXPANSION TANK
EUH	ELECTRIC UNIT HEATER
EWC	ELECTRIC WATER COOLER
EWH	ELECTRIC WATER HEATER
EWT	ENTERING WATER TEMPERATURE
F	FIRE SUPPRESSION PIPING
F-_	FURNACE
FC	FLUID COOLER
FCO	FLOOR CLEANOUT
FCU	FAN COIL UNIT
FD	FIRE DAMPER
FLA	FULL LOAD AMPS
FOR	FUEL OIL RETURN
FOS	FUEL OIL SUPPLY
FOV	FUEL OIL VENT
FPM	FEET PER MINUTE
FPS	FEET PER SECOND
FS	FLOOR SINK
FSD	FIRE/SMOKE DAMPER
FT	FINNED TUBE
G	GAS
GCWR	GLYCOL CHILLED WATER RETURN
GCWS	GLYCOL CHILLED WATER SUPPLY
GD	GARBAGE DISPOSAL
GDH	GAS DUCT HEATER
GHCR	GLYCOL HOTICHILLED WATER RETURN
GHCS	GLYCOL HOTICHILLED WATER SUPPLY
GHWR	GLYCOL HOT WATER RETURN
GHWS	GLYCOL HOT WATER SUPPLY
GI	GREASE INTERCEPTOR
GPD	GALLONS PER DAY
GPH	GALLONS PER HOUR
GPM	GALLONS PER MINUTE
GV	GAS VENT
GWH	GAS WATER HEATER
H	HUMIDIFIER
HB	HOSE BIBB
HC	HEATING COIL
HCR	HOTICHILLED WATER RETURN
HCS	HOTICHILLED WATER SUPPLY
HP	HORSEPOWER
HP-_	HEAT PUMP
HPR	HIGH PRESSURE RETURN
HPS	HIGH PRESURE STEAM
HRC	HEAT RECOVERY COIL
HVLS	HIGH VOLUME LOW SPEED
HWR	HOT WATER RETURN (HEATING)
HWS	HOT WATER SUPPLY (HEATING)
HWP	HOT WATER PUMP
HX	HEAT EXCHANGER
HY	HYDRANTS
IH	INTAKE HOOD
IRH	INFRARED RADIANT HEATER
KH	KITCHEN HOOD
KW	KILOWATT
KWH	KILOWATT HOURS
L	LAVATORY
LAT	LEAVING AIR TEMPERATURE
LPR	LOW PRESSURE RETURN
LPG	LIQUIFIED PETROLEUM GAS
LPS	LOW PRESSURE STEAM
LRA	LOCKED ROTOR AMPS
LS	LAUNDRY SINK
LV	LOUVER
LWT	LEAVING WATER TEMPERATURE
MAU	MAKE-UP AIR UNIT
MAX	MAXIMUM
MBH	1000 BTUH
MCA	MINIMUM CIRCUIT AMPS
MD	MOTORIZED DAMPER
MIN	MINIMUM
MOCP	MAXIMUM OVERCURRENT PROTECTION
MPR	MEDIUM PRESSURE RETURN
MPS	MEDIUM PRESSURE STEAM
MS	MOP SINK
N	NITROGEN
NC	NORMALLY CLOSED
NO	NORMALLY OPEN
NPCW	NONPOTABLE COLD WATER
NPHW	NONPOTABLE HOT WATER
NPHWR	NONPOTABLE HOT WATER RECIRCULATING
OA	OUTSIDE AIR
OB	OUTLET BOX
OI	OIL INTERCEPTOR
ORD	OVERFLOW ROOF DRAIN
OST	OVERFLOW STORM WATER
OX	OXYGEN
P	PUMP
PHC	PREHEAT COIL
PIV	POST INDICATING VALVE
PRV	PRESSURE REGULATING VALVE
PSF	POUNDS PER SQUARE FOOT
PSI	POUNDS PER SQUARE INCH
PSIG	POUNDS PER SQUARE INCH, GAUGE
PTAC	PACKAGED TERMINAL AIR CONDITIONER
RA	RETURN AIR
RCP	RADIANT CEILING PANEL
RD	ROOF AREA DRAINS
RF	RETURN FAN
RH	RELIEF HOOD
RHC	REHEAT COIL
RH	ROOF HYDRANT
RL	REFRIGERANT LIQUID LINE
RLA	RELIEF AIR
RLF	RELIEF FAN
RO	REVERSE OSMOSIS WATER
RPM	REVOLUTIONS PER MINUTE
RS	REFRIGERANT SUCTION LINE
RTU	ROOF TOP UNIT
RV	RELIEF VALVE
S	SINK
SA	SUPPLY AIR
SAN	SANITARY SEWER
SD	SMOKE DAMPER
SF	SUPPLY FAN
SFU	SANITARY FIXTURE UNIT
SH	SHOWER
SOI	SAND OIL INTERCEPTOR
SP	STATIC PRESSURE
SP	SUMP PUMP
SSS	SURGICAL SCRUB SINK
ST	STORM WATER
T	THERMOSTAT
TD	TRENCH DRAIN
TMV	THERMOSTATIC MIXING VALVE
TONS	TONS OF REFRIGERATION
TSP	TOTAL STATIC PRESSURE
UH	UNIT HEATER
UR	URINAL
V	VENT
VAC	VACUUM
VAV	VARIABLE AIR VOLUME
VD	VOLUME DAMPER
VEL	VELOCITY
VFD	VARIABLE FREQUENCY DRIVE
VRF	VARIABLE REFRIGERANT FLOW
VTR	VENT THRU ROOF
WB	WET BULB
WC	WATER CLOSETS
WCO	WALL CLEANOUT
WF	WASH FOUNTAINS
WFU	WATER FIXTURE UNITS
WH	WALL HYDRANT
WMB	WASHING MACHINE BOX
WPD	WATER PRESSURE DROP
WS	WATER SOFTENER
WSHP	WATER SOURCE HEAT PUMP
WWHP	WATER TO WATER HEAT PUMP
YH	YARD HYDRANT

GENERAL NOTES

A. EXISTING CONDITIONS ARE BASED ON DRAWINGS PROVIDED BY THE OWNER AND LIMITED FIELD VERIFICATION. THE CONTRACTOR SHALL FIELD VERIFY ALL EXISTING CONDITIONS AND DIMENSIONS AND NOTIFY THE ARCHITECT/ENGINEER OF ANY DISCREPANCIES OR VARIATIONS FROM THOSE SHOWN ON THE DRAWINGS. THE CONTRACTOR SHALL ADJUST TO ACTUAL FIELD CONDITIONS AT NO ADDITIONAL EXPENSE TO THE OWNER.

B. ALL CONTRACTORS ARE RESPONSIBLE FOR REVIEWING ENTIRE SET OF DOCUMENTS TO DETERMINE THEIR FULL SCOPE OF WORK. CONTRACTOR SHALL NOT BE ALLOWED EXTRA COSTS DUE TO FAILURE TO REVIEW ENTIRE SET OF DOCUMENTS.

C. CONTRACTOR SHALL TAKE ALL MEASUREMENTS FOR WORK AND BE RESPONSIBLE FOR SAME. CONTRACTOR SHALL ADJUST FOR ACTUAL FIELD CONDITIONS AT NO ADDITIONAL EXPENSE TO OWNER. COORDINATE THE WORK AND SHOP DRAWINGS WITH ALL OTHER TRADES AFFECTED.

D. CONTRACTOR SHALL COORDINATE THE ROUTING OF ALL DUCTWORK WITH STRUCTURE, CEILING, LIGHTING, AND PIPING.

E. MAINTAIN MANUFACTURER'S REQUIRED CLEARANCE AROUND ALL EQUIPMENT TO ALLOW FOR MAINTENANCE ACCESS.

F. ALL PIPING IN CONCEALED LOCATIONS SHALL BE ROUTED AT RIGHT ANGLES AND PARALLEL TO BUILDING WALLS UNLESS OTHERWISE INDICATED.

G. DO NOT ROUTE DUCTWORK OR PIPING ABOVE ELECTRICAL PANELS. MAINTAIN ALL CODE REQUIRED CLEARANCES.

H. IN THE EVENT THE CONTRACTOR ENCOUNTERS ON THE SITE, MATERIAL REASONABLY BELIEVED TO BE ASBESTOS, LEAD-BASED PAINT, OR ANY OTHER HAZARDOUS MATERIAL WHICH HAS NOT BEEN RENDERED HARMLESS, THE CONTRACTOR SHALL IMMEDIATELY STOP WORK IN THE AREA AFFECTED AND REPORT THE CONDITION TO THE OWNER AND ARCHITECT IN WRITING. THE WORK IN THE AFFECTED AREA SHALL NOT THEREAFTER BE RESUMED EXCEPT BY WRITTEN AGREEMENT OF THE OWNER AND CONTRACTOR.

I. ALL RUNOUTS TO AIR TERMINALS SHALL MATCH INLET SIZE UNLESS OTHERWISE NOTED.

J. ANY UTILITY OR SYSTEM DISRUPTIONS OR OUTAGES DURING CONSTRUCTION SHALL BE COORDINATED WITH THE OWNER AND GENERAL CONTRACTOR.

REF. NOTES (X)

PROJECT MECHANICAL REFERENCED NOTES

SEE INDIVIDUAL SHEETS FOR REFERENCE NOTES.

MECHANICAL SHEET LIST

DESIGNED: MLB
DRAWN: MLB
CHECKED: AJP

ISSUE DATE: 10/18/2024
REVISIONS:

No.:	DATE:	BY:	DESCRIPTION:

PROFESSIONAL MECHANICAL ENGINEER
ANTHONY J. POSPISIL
E-20118
STATE OF NEBRASKA
10/18/2024

SCHEMMER
Design with Purpose. Build with Confidence.
1044 North 115th Street, Suite 300, Omaha, Nebraska 68154 | 402.493.4800
CA0666

LANOHA DEVELOPMENT
HAWTHORNE COURT MULTI-TENANT BUILDING
17662 WELCH PLAZA
OMAHA, NE 68154

MECHANICAL INFO SHEET

PROJECT NO.: 010347.001

M 00

SECTION 230000—GENERAL HVAC REQUIREMENTS

PART 1—GENERAL

1.1 DESCRIPTION OF WORK

A. This Division includes all labor, materials, equipment, tools, supervision, start-up services, Owner training, etc., including all incidental and related items, necessary to complete installation and successfully test and start up and operate the HVAC systems indicated on the drawings, and as described in each Section of Division 230000 Specifications.

B. All work shall be completed in compliance with local codes, rules, and regulations. In the event that the plans conflict with any rules, regulation, or codes, the rules, regulations, and codes shall govern. Where the plans exceed code requirements, the plans shall govern.

C. The Contractor and his Subcontractors shall include all materials, labor, and necessary equipment in his bid.

1.2 DRAWINGS

A. The drawings are generally diagrammatic and show general location and arrangement of equipment, ductwork, piping, and accessories. The contractor shall provide and install all necessary equipment, fittings, offsets and other components required to adapt to field conditions, interferences, and code requirements to deliver a complete and functional system.

B. Deviations from the drawings, with the exception of changes to field conditions, and do not effect system functionality, shall not be made without the written approval of the Engineer.

C. Architectural and Structural drawings take precedence in all matters pertaining to the building structure. HVAC drawings take precedence in all matter pertaining to HVAC work and electrical drawings to electrical work. Where conflicts between trades exist, report conflicts or differences to the Architect and Engineer.

1.3 COORDINATION

A. The Contractor shall examine the plans and coordinate with other trades for scheduling of work.

B. Coordinate all penetrations with architectural and structural trades.

C. Refer to architectural plans for exact locations and heights of fixtures.

D. Refer to architectural plans for coordination of all ceiling mounted access panels for HVAC equipment that requires access.

E. All HVAC equipment and piping located above ceiling shall be installed to preserve ceiling heights listed on architect ceiling plans.

1.4 GUARANTEE

A. Contractor shall guarantee that all labor, materials and equipment are free from defects. Contractor shall agree to replace or repair any part of their project scope that becomes defective with one year from substantial completion and following final acceptance from the Owner.

1.5 PERMITS AND FEES

A. The Contractor shall be responsible for coordinating and obtaining all applicable agency approvals for utility connections and permits.

1.6 ACTION SUBMITTALS

A. Provide product submittals for all required specification sections. Submittals shall be submitted in PDF format.

B. Contractor shall review and mark with approval stamp before submitting to Architect.

1.7 EQUIPMENT AND MATERIAL MANUFACTURERS

A. All equipment shall be provided with normally supplied accessories needed for complete installation.

B. All equipment shall be new and shall be standard products from the current manufacture product line offering.

C. If an alternate manufacturer to the basis of design is submitted and approved, the Contractor shall assume all costs required to adapt the system to the submitted piece of equipment, including, but not limited to: piping, sheet metal, electrical work, and building alterations. Alternate equipment shall conform to all space requirements and operating conditions.

1.8 QUALITY ASSURANCE

A. Structural-Steel Welding Qualifications: Qualify procedures and personnel according to AWS D1.1/D1.1M, "Structural Welding Code - Steel."

B. Pipe Welding Qualifications: Qualify procedures and operators according to ASME Boiler and Pressure Vessel Code, Section IX

PART 2—PRODUCTS (NOT USED)

PART 3—EXECUTION

3.1 PROTECTION AND HANDLING OF EQUIPMENT

A. The Contractor shall be responsible for ensuring all equipment and materials delivered to the site are protected from theft and damage until time of project turnover to the Owner.

B. All HVAC fixtures, ductwork, and piping shall be protected from damage and use after installation.

3.2 FIELD QUALITY CONTROL

A. Field Service: Engage a trained service representative to test and inspect all installed equipment, assemblies and installations.

B. Perform functional tests on all installed equipment.

C. Any equipment that does not pass tests and inspections shall be considered defective.

D. Prepare test and inspection reports. Reports shall be included in Operation and Maintenance Manual turned over to Owner.

3.3 OPERATION AND MAINTENANCE

A. Prior to final inspections, the Contractor shall provide training to the Owner on operation, adjustment, and maintenance on all installed equipment.

B. The Contractor shall prepare and turnover to the Owner a binder with all operation and maintained manuals for all equipment installed.

3.4 ACCESSIBILITY

A. All equipment installed shall fit within the designated space with adequate access for service and maintained and required by the manufacturer.

3.5 CLEANING

A. Each trade is responsible for maintaining a clean and hazard free work area.

B. After each piece of equipment has been installed and tested, each system shall be cleaned and flushed.

END OF SECTION

SECTION 230529—HANGERS AND SUPPORTS FOR HVAC PIPING AND EQUIPMENT

PART 1—GENERAL

1.1 ACTION SUBMITTALS

A. Product Data: For each type of product.

PART 2—PRODUCTS

2.1 PERFORMANCE REQUIREMENTS

A. Structural Performance: Hangers and supports for HVAC piping and equipment shall withstand the effects of gravity loads and stresses within limits and under conditions indicated according to ASCE/SEI 7.

1. Design supports for multiple pipes, including pipe stands, capable of supporting combined weight of supported systems, system contents, and test water.
2. Design equipment supports capable of supporting combined operating weight of supported equipment and connected systems and components.

2.2 METAL PIPE HANGERS AND SUPPORTS

A. Carbon-Steel Pipe Hangers and Supports:

1. Description: MSS SP-58, Types 1 through 58, factory-fabricated components.
2. Galvanized Metallic Coatings: Pregalvanized, hot-dip galvanized, or electrogalvanized.
3. Nonmetallic Coatings: Plastic coated, or epoxy powder-coated.
4. Padded Hangers: Hanger with fiberglass or other pipe insulation pad or cushion to support bearing surface of piping.
5. Hanger Rods: Continuous-thread rod, nuts, and washer made of carbon steel.

2.3 EQUIPMENT SUPPORTS

A. Description: Welded, shop- or field-fabricated equipment support made from structural carbon-steel shapes.

2.4 MATERIALS

A. Carbon Steel: ASTM A 1011/A 1011M.

B. Structural Steel: ASTM A 36/A 36M, carbon-steel plates, shapes, and bars; black and galvanized.

PART 3—EXECUTION

3.1 APPLICATION

A. Strength of Support Assemblies: Where not indicated, select sizes of components so strength will be adequate to carry present and future static loads within specified loading limits. Minimum static design load used for strength determination shall be weight of supported components plus 90 kg (200 lb).

3.2 HANGER AND SUPPORT INSTALLATION

A. Metal Pipe-Hanger Installation: Comply with MSS SP-58. Install hangers, supports, clamps, and attachments as required to properly support piping from the building structure.

B. Equipment Support Installation: Fabricate from welded-structural-steel shapes.

C. Install hangers and supports to allow controlled thermal movement of piping systems, to permit freedom of movement between pipe anchors, and to facilitate action of expansion joints, expansion loops, expansion bends, and similar units.

D. Install lateral bracing with pipe hangers and supports to prevent swaying.

E. Install building attachments within concrete slabs or attach to structural steel. Install additional attachments at concentrated loads, including valves, flanges, and strainers, NPS 2-1/2 (DN 65) and larger and at changes in direction of piping. Install concrete inserts before concrete is placed; fasten inserts to forms and install reinforcing bars through openings at top of inserts.

F. Load Distribution: Install hangers and supports so that piping live and dead loads and stresses from movement will not be transmitted to connected equipment.

G. Pipe Slopes: Install hangers and supports to provide indicated pipe slopes and to not exceed maximum pipe deflections allowed by ASME B31.9 for building services piping.

H. Insulated Piping:

1. Attach clamps and spacers to piping.
   a. Piping Operating above Ambient Air Temperature: Clamp may project through insulation.
   b. Piping Operating below Ambient Air Temperature: Use thermal-hanger shield insert with clamp sized to match OD of insert.
   c. Do not exceed pipe stress limits allowed by ASME B31.9 for building services piping.
2. Install MSS SP-58, Type 39, protection saddles if insulation without vapor barrier is indicated. Fill interior voids with insulation that matches adjoining insulation.
3. Shield Dimensions for Pipe: Not less than the following:
   a. NPS 1/4 to NPS 3-1/2 (DN 8 to DN 90): 12 inches (305 mm) long and 0.048 inch (1.22 mm) thick.

3.3 EQUIPMENT SUPPORTS

A. Fabricate structural-steel stands to suspend equipment from structure overhead or to support equipment above floor.

B. Provide lateral bracing, to prevent swaying, for equipment supports.

3.4 METAL FABRICATIONS

A. Cut, drill, and fit miscellaneous metal fabrications for equipment supports.

B. Fit exposed connections together to form hairline joints. Field weld connections that cannot be shop welded because of shipping size limitations.

C. Field Welding: Comply with AWS D1.1/D1.1M procedures for shielded, metal arc welding; appearance and quality of welds; and methods used in correcting welding work; and with the following:

1. Use materials and methods that minimize distortion and develop strength and corrosion resistance of base metals.
2. Obtain fusion without undercut or overlap.
3. Remove welding flux immediately.
4. Finish welds at exposed connections so no roughness shows after finishing and so contours of welded surfaces match adjacent contours.

3.5 ADJUSTING

A. Hanger Adjustments: Adjust hangers to distribute loads equally on attachments and to achieve indicated slope of pipe.

B. Trim excess length of continuous-thread hanger and support rods to 1-1/2 inches (40 mm).

3.6 HANGER AND SUPPORT SCHEDULE

A. Specific hanger and support requirements are in Sections specifying piping systems and equipment.

B. Comply with MSS SP-58 for pipe-hanger selections and applications that are not specified in piping system Sections.

C. Use hangers and supports with galvanized metallic coatings for piping and equipment that will not have field-applied finish.

D. Use carbon-steel pipe hangers and supports and attachments for general service applications.

E. Horizontal-Piping Hangers and Supports: Unless otherwise indicated and except as specified in piping system Sections, install the following types:

1. Adjustable, Steel Clevis Hangers (MSS Type 1): For suspension of noninsulated or insulated, stationary pipes NPS 1/2 to NPS 30 (DN 15 to DN 750).
2. Yoke-Type Pipe Clamps (MSS Type 2): For suspension of up to 1050 deg F (566 deg C), pipes NPS 4 to NPS 24 (DN 100 to DN 600), requiring up to 4 inches (100 mm) of insulation.
3. Adjustable, Steel Band Hangers (MSS Type 7): For suspension of noninsulated, stationary pipes NPS 1/2 to NPS 8 (DN 15 to DN 200).
4. Adjustable Band Hangers (MSS Type 9): For suspension of noninsulated, stationary pipes NPS 1/2 to NPS 8 (DN 15 to DN 200).

F. Vertical-Piping Clamps: Unless otherwise indicated and except as specified in piping system Sections, install the following types:

1. Extension Pipe or Riser Clamps (MSS Type 8): For support of pipe risers NPS 3/4 to NPS 24 (DN 24 to DN 600).

G. Hanger-Rod Attachments: Unless otherwise indicated and except as specified in piping system Sections, install the following types:

1. Steel Turnbuckles (MSS Type 13): For adjustment up to 6 inches (150 mm) for heavy loads.
2. Steel Clevises (MSS Type 14): For 120 to 450 deg F (49 to 232 deg C) piping installations.
3. Swivel Turnbuckles (MSS Type 15): For use with MSS Type 11, split pipe rings.
4. Malleable-Iron Sockets (MSS Type 16): For attaching hanger rods to various types of building attachments.

H. Building Attachments: Unless otherwise indicated and except as specified in piping system Sections, install the following types:

1. Steel or Malleable Concrete Inserts (MSS Type 18): For upper attachment to suspend pipe hangers from concrete ceiling.
2. Top-Beam C-Clamps (MSS Type 19): For use under roof installations with bar-joist construction, to attach to top flange of structural shape.
3. Side-Beam or Channel Clamps (MSS Type 20): For attaching to bottom flange of beams, channels, or angles.
4. Center-Beam Clamps (MSS Type 21): For attaching to center of bottom flange of beams.
5. C-Clamps (MSS Type 23): For structural shapes.
6. Top-Beam Clamps (MSS Type 25): For top of beams if hanger rod is required tangent to flange edge.
7. Steel-Beam Clamps with Eye Nuts (MSS Type 28): For attaching to bottom of steel I-beams for heavy loads.

END OF SECTION

SECTION 231123—FACILITY NATURAL-GAS PIPING

PART 1—GENERAL

1.1 QUALITY ASSURANCE

A. Steel Support Welding Qualifications: Qualify procedures and personnel according to AWS D1.1/D1.1M, "Structural Welding Code - Steel."

B. Pipe Welding Qualifications: Qualify procedures and operators according to ASME Boiler and Pressure Vessel Code.

C. Electrical Components, Devices, and Accessories: Listed and labeled as defined in NFPA 70, by a qualified testing agency, and marked for intended location and application.

PART 2—PRODUCTS

2.1 PERFORMANCE REQUIREMENTS

A. Minimum Operating-Pressure Ratings:

1. Piping and Valves: 100 psig (690 kPa) minimum unless otherwise indicated.
2. Service Regulators: 100 psig (690 kPa) minimum unless otherwise indicated.

B. Natural-Gas System Pressure within Buildings: More than 0.5 psig (3.45 kPa) but not more than 2 psig (13.8 kPa).

2.2 PIPES, TUBES, AND FITTINGS

A. Steel Pipe: ASTM A 53/A 53M, black steel, Schedule 40, Type E or S, Grade B.

1. Malleable-Iron Threaded Fittings: ASME B16.3, Class 150, standard pattern.
2. Wrought-Steel Welding Fittings: ASTM A 234/A 234M for butt welding and socket welding.
3. Unions: ASME B16.39, Class 150, malleable iron with brass-to-iron seat, ground joint, and threaded ends.

2.3 PIPING SPECIALTIES

A. Appliance Flexible Connectors:

1. Indoor, Fixed-Appliance Flexible Connectors: Comply with ANSI Z21.24.
2. Indoor, Movable-Appliance Flexible Connectors: Comply with ANSI Z21.69.
3. Corrugated stainless-steel tubing with polymer coating.
4. Operating-Pressure Rating: 0.5 psig (3.45 kPa).
5. End Fittings: Zinc-coated steel.
6. Threaded Ends: Comply with ASME B1.20.1.
7. Maximum Length: 72 inches (1830 mm).

B. Y-Pattern Strainers:

1. Body: ASTM A 126, Class B, cast iron with bolted cover and bottom drain connection.
2. End Connections: Threaded ends for NPS 2 (DN 50) and smaller.
3. Strainer Screen: 60-mesh startup strainer, and perforated stainless-steel basket with 50 percent free area.
4. CWP Rating: 125 psig (862 kPa).

2.4 JOINING MATERIALS

A. Joint Compound and Tape: Suitable for natural gas.

B. Welding Filler Metals: Comply with AWS D10.12/D10.12M for welding materials appropriate for wall thickness and chemical analysis of steel pipe being welded.

C. Brazing Filler Metals: Alloy with melting point greater than 1000 deg F (540 deg C) complying with AWS A5.8/A5.8M. Brazing alloys containing more than 0.05 percent phosphorus are prohibited.

2.5 MANUAL GAS SHUTOFF VALVES

A. General Requirements for Metallic Valves, NPS 2 (DN 50) and Smaller: Comply with ASME B16.33.

1. CWP Rating: 125 psig (862 kPa).
2. Threaded Ends: Comply with ASME B1.20.1.
3. Dryseal Threads on Flare Ends: Comply with ASME B1.20.3.
4. Tamperproof Feature: Locking feature for valves indicated in "Underground Manual Gas Shutoff Valve Schedule" and "Aboveground Manual Gas Shutoff Valve Schedule" Articles.
5. Listing: Listed and labeled by an NRTL acceptable to authorities having jurisdiction for valves 1 inch (25 mm) and smaller.
6. Service Mark: Valves 1-1/4 inches (32 mm) to NPS 2 (DN 50) shall have initials "WOG" permanently marked on valve body.

B. Two-Piece, Full-Port, Bronze Ball Valves with Bronze Trim: MSS SP-110.

1. Body: Bronze, complying with ASTM B 584.
2. Ball: Chrome-plated bronze.
3. Stem: Bronze; blowout proof.
4. Seats: Reinforced TFE; blowout proof.
5. Packing: Threaded-body packnut design with adjustable-stem packing.
6. Ends: Threaded, flared, or socket as indicated in "Underground Manual Gas Shutoff Valve Schedule" and "Aboveground Manual Gas Shutoff Valve Schedule" Articles.
7. CWP Rating: 600 psig (4140 kPa).
8. Listing: Valves NPS 1 (DN 25) and smaller shall be listed and labeled by an NRTL acceptable to authorities having jurisdiction.
9. Service: Suitable for natural-gas service with "WOG" indicated on valve body.

2.6 PRESSURE REGULATORS

A. General Requirements:

1. Single stage and suitable for natural gas.
2. Steel jacket and corrosion-resistant components.
3. Elevation compensator.
4. End Connections: Threaded for regulators NPS 2 (DN 50) and smaller.

B. Appliance Pressure Regulators: Comply with ANSI Z21.18.

1. Body and Diaphragm Case: Die-cast aluminum.
2. Springs: Zinc-plated steel; interchangeable.
3. Diaphragm Plate: Zinc-plated steel.
4. Seat Disc: Nitrile rubber.
5. Seal Plug: Ultraviolet-stabilized, mineral-filled nylon.
6. Factory-Applied Finish: Minimum three-layer polyester and polyurethane paint finish.
7. Regulator may include vent limiting device, instead of vent connection, if approved by authorities having jurisdiction.
8. Maximum Inlet Pressure: 2 psig (13.8 kPa).

2.7 DIELECTRIC UNIONS

A. Dielectric Unions:

1. Description:
   a. Standard: ASSE 1079.
   b. Pressure Rating: 125 psig (860 kPa) minimum at 180 deg F (82 deg C).
   c. End Connections: Solder-joint copper alloy and threaded ferrous.

PART 3—EXECUTION

3.1 INDOOR PIPING INSTALLATION

A. Comply with NFPA 54 for installation and purging of natural-gas piping.

B. Drawing plans, schematics, and diagrams indicate general location and arrangement of piping systems. Indicated locations and arrangements are used to size pipe and calculate friction loss, expansion, and other design considerations. Install piping as indicated unless deviations to layout are approved on Coordination Drawings.

C. Arrange for pipe spaces, chases, slots, sleeves, and openings in building structure during progress of construction, to allow for mechanical installations.

D. Install piping in concealed locations unless otherwise indicated and except in equipment rooms and service areas.

E. Install piping indicated to be exposed and piping in equipment rooms and service areas at right angles or parallel to building walls. Diagonal runs are prohibited unless specifically indicated otherwise.

F. Install piping above accessible ceilings to allow sufficient space for ceiling panel removal.

G. Locate valves for easy access.

H. Install natural-gas piping at uniform grade of 2 percent down toward drip and sediment traps.

I. Install piping free of sags and bends.

J. Install fittings for changes in direction and branch connections.

K. Verify final equipment locations for roughing-in.

L. Comply with requirements in Sections specifying gas-fired appliances and equipment for roughing-in requirements.

M. Drips and Sediment Traps: Install drips at points where condensate may collect, including service-meter outlets. Locate where accessible to permit cleaning and emptying. Do not install where condensate is subject to freezing.

1. Construct drips and sediment traps using tee fitting with bottom outlet plugged or capped. Use nipple a minimum length of 3 pipe diameters, but not less than 3 inches (75 mm) long and same size as connected pipe. Install with space below bottom of drip to remove plug or cap.

N. Extend relief vent connections for service regulators, line regulators, and overpressure protection devices to outdoors and terminate with weatherproof vent cap.

O. Use eccentric reducer fittings to make reductions in pipe sizes. Install fittings with level side down.

P. Connect branch piping from top or side of horizontal piping.

Q. Install unions in pipes NPS 2 (DN 50) and smaller, adjacent to each valve, at final connection to each piece of equipment.

R. Do not use natural-gas piping as grounding electrode.

S. Install strainer on inlet of each line-pressure regulator and automatic or electrically operated valve.

3.2 VALVE INSTALLATION

A. Install manual gas shutoff valve for each gas appliance ahead of corrugated stainless-steel tubing or copper connector.

B. Install regulators and overpressure protection devices with maintenance access space adequate for servicing and testing.

3.3 PIPING JOINT CONSTRUCTION

A. Ream ends of pipes and tubes and remove burrs.

B. Remove scale, slag, dirt, and debris from inside and outside of pipe and fittings before assembly.

C. Threaded Joints:

1. Thread pipe with tapered pipe threads complying with ASME B1.20.1.
2. Cut threads full and clean using sharp dies.
3. Ream threaded pipe ends to remove burrs and restore full inside diameter of pipe.
4. Apply appropriate tape or thread compound to external pipe threads unless dryseal threading is specified.
5. Damaged Threads: Do not use pipe or pipe fittings with threads that are corroded or damaged. Do not use pipe sections that have cracked or open welds.

D. Welded Joints:

1. Construct joints according to AWS D10.12/D10.12M, using qualified processes and welding operators.
2. Bevel plain ends of steel pipe.
3. Patch factory-applied protective coating as recommended by manufacturer at field welds and where damage to coating occurs during construction.

3.4 HANGER AND SUPPORT INSTALLATION

A. Install hangers for steel piping, with maximum horizontal spacing and minimum rod diameter, to comply with MSS-58, locally enforced codes, and authorities having jurisdiction requirements, whichever are most stringent.

B. Support horizontal piping within 12 inches (300 mm) of each fitting.

C. Support vertical runs of steel piping to comply with MSS-58, locally enforced codes, and authorities having jurisdiction requirements, whichever are most stringent.

3.5 CONNECTIONS

A. Connect to utility's gas main according to utility's procedures and requirements.

B. Install natural-gas piping electrically continuous, and bonded to gas appliance equipment grounding conductor of the circuit powering the appliance according to NFPA 70.

C. Install piping adjacent to appliances to allow service and maintenance of appliances.

D. Connect piping to appliances using manual gas shutoff valves and unions. Install valve within 72 inches (1800 mm) of each gas-fired appliance and equipment. Install union between valve and appliances or equipment.

E. Sediment Traps: Install tee fitting with capped nipple in bottom to form drip, as close as practical to inlet of each appliance.

3.6 FIELD QUALITY CONTROL

A. Test, inspect, and purge natural gas according to NFPA 54 and authorities having jurisdiction.

B. Natural-gas piping will be considered defective if it does not pass tests and inspections.

C. Prepare test and inspection reports.

3.7 INDOOR PIPING SCHEDULE

A. Aboveground, branch piping NPS 1 (DN 25) and smaller shall be the following:

1. Steel pipe with malleable-iron fittings and threaded joints.

B. Aboveground, distribution piping shall be on of the following:

1. Steel pipe with malleable-iron fittings and threaded joints.
2. Steel pipe with wrought-steel fittings and welded joints.

3.8 ABOVEGROUND MANUAL GAS SHUTOFF VALVE SCHEDULE

A. Valves for all pipe sizes shall be the following:

1. Two-piece, full-port, bronze ball valve with bronze trim.

END OF SECTION

SECTION 235553 - GAS-FIRED UNIT HEATERS

PART 1—GENERAL

1.1 ACTION SUBMITTALS

A. Product Data: For each type of gas-fired unit heater.

1. Include rated capacities, operating characteristics, and accessories.

PART 2—PRODUCTS

2.1 MANUFACTURERS

A. Manufacturers: Subject to compliance with requirements, available manufacturers offering products that may be incorporated into the Work include, but are not limited to the following:

1. REZNOR, a brand of Nortek Global HVAC.
2. Sterling HVAC Products; a Mestek company.
3. Trane.

2.2 PERFORMANCE REQUIREMENTS

A. Electrical Components, Devices, and Accessories: Listed and labeled as defined in NFPA 70, by a qualified testing agency, and marked for intended location and application.

B. Capacities and Characteristics:

1. See plans for individual unit performance requirements.

2.3 MANUFACTURED UNITS

A. Description: Factory assembled, piped, and wired, and complying with ANSI Z83.8.

B. Gas Type: Design burner for natural gas having characteristics same as those of gas available at Project site.

C. Type of Venting: Indoor, separated combustion, power vented.

D. Housing: Steel, with integral draft hood and inserts for suspension mounting rods.

1. External Casings and Cabinets: Baked enamel or Powder coating over corrosion-resistant-treated surface.
2. Discharge Louvers: Independently adjustable blades.

E. Accessories:

1. Two or Four-point suspension kit.
2. Power Venter: Centrifugal aluminized-steel fan, with stainless-steel shaft; 120-V ac motor.
3. Concentric, Terminal Vent Assembly: Combined combustion-air inlet and power-vent outlet with wall or roof caps. Include adapter assembly for connection to inlet and outlet pipes, and flashing for wall or roof penetration.

F. Heat Exchanger: Stainless steel.

G. Burner Material: Aluminized steel with stainless-steel inserts.

H. Propeller Unit Fan:

1. Aluminum propeller blades riveted to heavy-gage steel spider bolted to cast-iron hub, dynamically balanced, and resiliently mounted.
2. Fan-Blade Guard: Galvanized steel, complying with OSHA specifications, removable for maintenance.

I. Controls: Regulated redundant gas valve containing pilot solenoid valve, electric gas valve, pilot filter, pressure regulator, pilot shutoff, and manual shutoff all in one body.

1. Gas Control Valve: Single stage.
2. Ignition: Electronically controlled electric spark with flame sensor.
3. Fan Thermal Switch: Operates fan on heat-exchanger temperature.
4. Control transformer.
5. High Limit: Thermal switch or fuse to stop burner.
6. Thermostat: Devices and wiring are specified in Section 230923.27 "Temperature Instruments."
7. Thermostat:
   a. Single stage.
   b. Fan on-off-automatic switch.
   c. 24-V ac.
   d. 50 to 90 deg F (10 to 32 deg C) operating range.

J. Electrical Connection: Factory wire motors and controls for a single electrical connection.

PART 3—EXECUTION

3.1 INSTALLATION

A. Install and connect gas-fired unit heaters and associated gas and vent features and systems according to NFPA 54, applicable local codes and regulations, and manufacturer's written instructions.

3.2 EQUIPMENT MOUNTING

A. Suspended Units: Suspend from substrate using threaded rods, spring hangers, and building attachments. Secure rods to unit hanger attachments. Adjust hangers so unit is level and plumb.

3.3 CONNECTIONS

A. Piping installation requirements are specified in other Sections. Drawings indicate general arrangement of piping, fittings, and specialties.

B. Where installing piping adjacent to gas-fired unit heater, allow space for service and maintenance.

C. Gas Piping: Comply with Section 231123 "Facility Natural-Gas Piping." Connect gas piping to gas train inlet; provide union with enough clearance for burner removal and service.

3.4 ADJUSTING

A. Adjust initial temperature and humidity set points.

B. Adjust burner and other unit components for optimum heating performance and efficiency.

END OF SECTION

DESIGNED: MLB
DRAWN: MLB
CHECKED: AJP

ISSUE DATE: 10/18/2024
REVISIONS:

No.:	DATE:	BY:	DESCRIPTION:

PROFESSIONAL MECHANICAL ENGINEER
ANTHONY J. POSPISIL
E-20118
STATE OF NEBRASKA
10/18/2024

SCHEMMER
Design with Purpose. Build with Confidence.
1044 North 115th Street, Suite 300, Omaha, Nebraska 68154 | 402.493.4800
CA0666

LANOHA DEVELOPMENT
HAWTHORNE COURT MULTI-TENANT BUILDING
17662 WELCH PLAZA
OMAHA, NE 68154

SHEET SPECIFICATIONS - MECHANICAL

PROJECT NO.: 010347.001

M 01

REF. NOTES (X):

1	THIS SPACE IS RESERVED FOR DOMESTIC WATER SERVICE.
2	LOCATION OF NATURAL GAS METER MANIFOLD FOR BUILDING. COORDINATE INSTALLATION OF GAS METER AND METER MANIFOLD WITH NATURAL GAS UTILITY COMPANY.
3	COMBUSTION AIR AND VENT TO ROOF THROUGH MANUFACTURER APPROVED CONCENTRIC VENT. SIZE AND INSTALL PER MANUFACTURER REQUIREMENTS.
4	THERMOSTAT TO BE MOUNTED TO UNIT HEATER.

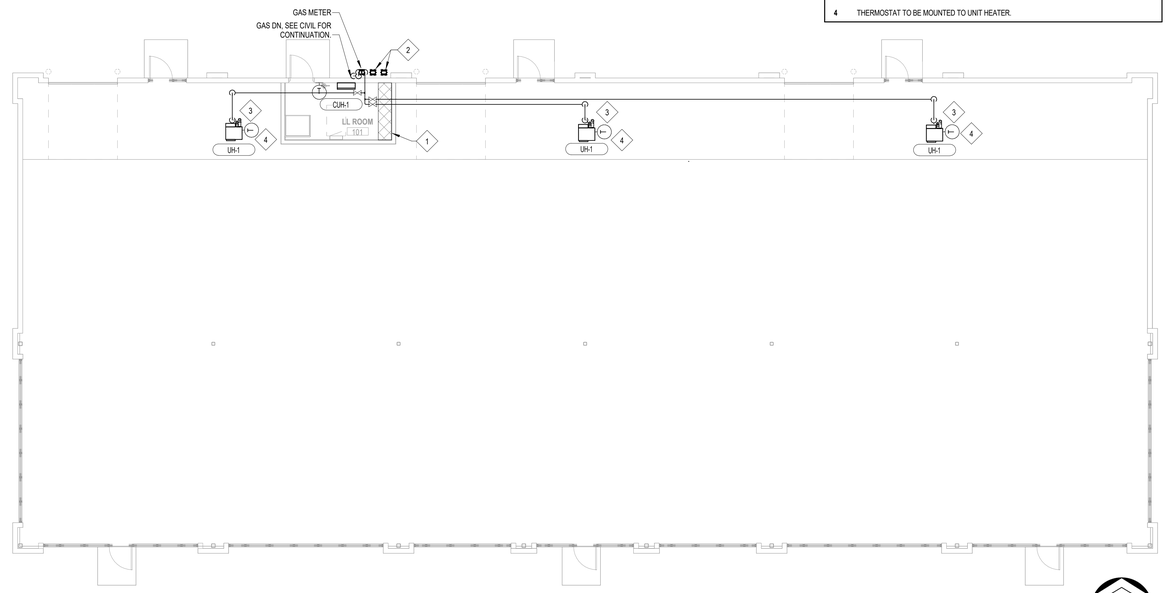

1 FLOOR PLAN - MECHANICAL
SCALE: 1/8" = 1'-0"

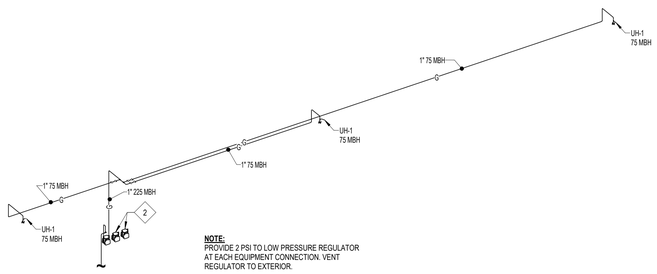

NOTE:
PROVIDE 2 PSI TO LOW PRESSURE REGULATOR AT EACH EQUIPMENT CONNECTION. VENT REGULATOR TO EXTERIOR.

PIPING SIZING BASED ON:
TOTAL DEVELOPED LENGTH: 250'-0"
GAS PRESSURE: 2.0 PSI WITH 1.0 PSI DROP
TOTAL CONNECTED LOAD: 225 MBH
EXPECTED FUTURE TOTAL: 1950 MBH

4 NATURAL GAS RISER - MECHANICAL
NOT TO SCALE

ELECTRIC CABINET UNIT HEATER SCHEDULE

MARK	LOCATION	HEATER ELECTRICAL DATA						AIR DELIVERY DATA			RECOM'D MOUNTING HEIGHT	MANUFACTURER AND MODEL NUMBER	REMARKS
		BTUH	KW	VOLTS	PH	HZ	AMP	CFM	AIR DISCHARGE	AIR INLET			
CUH-1	LL ROOM 101	17,076	5	208	1	60	24.03	250	LOWER FRONT	TOP	1'-0" A.F.F. TO BOTTOM	REZNOR EMC-TSL-AK2-H36-HK2-CL5	1,2

NOTES:
1. PROVIDE SINLE POLE, SINGLE STAGE THERMOSTAT
2. PROVIDE UNIT WITH ACCESSORIES REQUIRED FOR SURFACE MOUNTING.

GAS FIRED UNIT HEATER SCHEDULE

MARK	LOCATION	CFM	HEATING MBH		MOTOR DATA					MANUFACTURER AND MODEL NUMBER	REMARKS
			INPUT	OUTPUT	HP	VOLT	PH	HZ	FLA		
UH-1	SEE PLANS	961	75	62.25	0.06	115	1	60	3.7	REZNOR UDXC-TSL-75	1,2

NOTES:
1. INSTALL AT 10'-0" A.F.F.
2. PROVIDE UNIT WITH LINE VOLTAGE THERMOSTAT WITH 7 DAY TIMER.

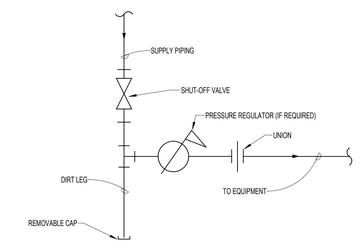

2 TYPICAL GAS PIPING DETAIL
SCALE: NOT TO SCALE

TYPICAL HVAC CONTROL DEVICE INSTALLATION

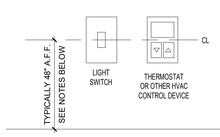

NOTES:
1. WHEN THERMOSTAT IS LOCATED ADJACENT TO LIGHT SWITCH OR OTHER WALL MOUNTED ELECTRICAL OR CONTROL DEVICE, DEVICES TO BE INSTALLED AT THE SAME ELEVATION.
2. ALL USER INPUT BUTTONS OR SWITCHES ON CONTORL DEVICE TO BE LOCATED BELOW 48" A.F.F. TO MEET ADA REQUIREMENTS.
3. WHEN INSTALLED NEAR DOOR, LIGHT SWITCH SHALL BE DEVICE CLOSEST TO DOOR FRAME.
4. IF DEVICE IS LOCATED ABOVE COUNTER, INSTALL AT 40" A.F.F.

3 THERMOSTAT DETAIL
SCALE: 12" = 1'-0"

DESIGNED:	MLB	ISSUE DATE:	10/18/2024
DRAWN:	MLB	REVISIONS:	
CHECKED:	AJP	No.: DATE: BY: DESCRIPTION:	

THIS DRAWING IS BEING MADE AVAILABLE BY SCHEMMER AS A SERVICE ON THIS PROJECT IN ACCORDANCE WITH STANDARD PROFESSIONAL SERVICES AGREEMENT. SCHEMMER TAKES NO RESPONSIBILITY OR LIABILITY FOR ANY USE OF THIS DRAWING OR ANY PART THEREOF EXCEPT IN ACCORDANCE WITH THE PROFESSIONAL SERVICES AGREEMENT.

PROFESSIONAL MECHANICAL ENGINEER
ANTHONY J. POSPISIL
E-20118
STATE OF NEBRASKA
10/18/2024

SCHEMMER
Design with Purpose. Build with Confidence.
1044 North 115th Street, Suite 300, Omaha, Nebraska 68154 | 402.493.4800
CA0666

LANOHA DEVELOPMENT
HAWTHORNE COURT MULTI-TENANT BUILDING
17662 WELCH PLAZA
OMAHA, NE 68154

FLOOR PLAN, DETAILS, & SCHEDULES - MECHANICAL

PROJECT NO.: 010347.001

M101

SYMBOL LEGEND

LIGHTING

- LUMINAIRE
- WALL MOUNTED LUMINAIRE
- WALL MOUNTED LUMINAIRE
- RECESSED LUMINAIRE
- SURFACE MOUNTED LUMINAIRE
- PENDANT MOUNTED LUMINAIRE
- STRIP / INDUSTRIAL LUMINAIRE
- WALL MOUNTED STRIP LUMINAIRE
- LUMINAIRE - NIGHT LIGHTING
- LUMINAIRE - EMERGENCY SYSTEM
- WALL WASH LUMINAIRE
- EMERGENCY BATTERY PACK LUMINAIRE
- REMOTE EMERGENCY HEAD
- TRACK LIGHTING
- EXIT LIGHT - WALL MOUNT WITH DIRECTIONAL ARROWS AS INDICATED, FILLED-IN QUARTERS INDICATE ILLUMINATION SIDES
- EXIT LIGHT - CEILING OR PENDANT MOUNT WITH DIRECTIONAL ARROWS AS INDICATED, FILLED-IN QUARTERS INDICATE ILLUMINATION SIDES
- EMERGENCY EXIT LIGHT COMBO
- POLE MOUNTED SITE LUMINAIRE
- CEILING FAN
- PHOTOCELL
- OCCUPANCY SENSOR
- RC ROOM CONTROLLER
- PP POWER PACK

WIRING DEVICES - SWITCHES

- S SINGLE POLE SWITCH
- S_2 TWO POLE SWITCH
- S_3 THREE-WAY SWITCH
- S_4 FOUR-WAY SWITCH
- S_D DIMMER SWITCH
- S_K KEY OPERATED SWITCH
- S_P SINGLE POLE SWITCH WITH PILOT
- S_{TE} THERMAL ELEMENT SWITCH
- S_T TIMER SWITCH
- S_{FT} FUSIBLE SWITCH (FUSETRON)
- S_X LOW VOLTAGE MOMENTARY CONTACT SWITCH

WIRING DEVICES - RECEPTACLES

- SIMPLEX RECEPTACLE
- DUPLEX RECEPTACLE
- QUADRUPLEX RECEPTACLE
- EMERGENCY RECEPTACLE
- CONTROLLED RECEPTACLE
- SPECIAL PURPOSE RECEPTACLE, NEMA CONFIGURATION NOTED
- PLUG-IN STRIP - LENGTH AND QUANTITY OF OUTLETS AS SHOWN
- POWER POLE
- DROP CORD RECEPTACLE ASSEMBLY

CONDUIT AND BOXES

- J JUNCTION BOX - CEILING MOUNT
- J JUNCTION BOX - WALL MOUNT
- FB FLOOR BOX
- FP FLOOR POKE-THROUGH DEVICE
- WB WALL AV BOX
- CONDUIT DOWN
- CONDUIT UP
- INDICATES BUSHED CONDUIT

POWER EQUIPMENT

- SAFETY SWITCH
- COMBINATION STARTER SAFETY SWITCH
- R RELAY - CONTROL AS NOTED
- M MOTOR CONNECTION
- PB PUSHBUTTON STATION
- M METER SOCKET

PANELS AND CABINETS

- BRANCH CIRCUIT PANEL
- DISTRIBUTION PANEL
- SWITCHBOARD, SWITCHGEAR, MCC
- EQUIPMENT OR TERMINAL CABINET
- T DRY TYPE TRANSFORMER

FIRE ALARM SYSTEM

- F MANUAL PULL STATION
- F SF STROBE
- F H HORN
- F SF H HORN STROBE
- F SB SPEAKER
- F SB SPEAKER STROBE
- DH MAGNETIC DOOR HOLDER
- S SMOKE DETECTOR
- D HEAT DETECTOR
- S DUCT SMOKE DETECTOR
- FS FLOW SWITCH
- TS SPRINKLER TAMPER SWITCH
- PS POST INDICATING VALVE SWITCH
- RI REMOTE INDICATOR LIGHT

VOICE AND DATA

- VOICE OUTLET
- DATA OUTLET
- VOICE/DATA OUTLET
- WIRELESS ACCESS POINT

SOUND, TELEVISION, AND SECURITY

- S SPEAKER
- S HORN (PA, PUBLIC ADDRESS)
- IC INTERCOM SPEAKER STATION
- SVC VOLUME CONTROL STATION
- M MICROPHONE JACK
- TV TELEVISION OUTLET
- CCTV CAMERA
- MS MOTION SENSOR

NURSE CALL

- N BEDSIDE STATION
- N_{DB} DOUBLE BED BEDSIDE STATION
- N_E EMERGENCY PULL STATION
- N_S STAFF STATION
- N_D DUTY STATION
- N_P PILLOW SPEAKER
- N DOME LIGHT
- N_M MASTER STATION

POWER DISTRIBUTION ONE LINE

- G EMERGENCY GENERATOR
- FUSE
- DISCONNECT SWITCH
- FUSED DISCONNECT SWITCH
- DRAW OUT VACUUM CIRCUIT BREAKER
- PLUG-IN OR DRAWOUT CONNECTOR
- CIRCUIT BREAKER
- THERMAL OVERLOAD RELAY
- K1 KIRK KEY INTERLOCK
- LIGHTNING SURGE ARRESTOR
- A AMMETER
- V VOLTMETER
- TRANSFORMER
- X:Y CURRENT TRANSFORMER - (RATIO)

SYMBOL NOTES:

"C" INDICATES CEILING MOUNTED
"F" INDICATES FLOOR MOUNTED
"S" INDICATES SURFACE MOUNTED
"G" INDICATES GROUND FAULT INTERRUPTING
"IG" INDICATES ISOLATED GROUND
"AC" INDICATES MOUNTING 6" ABOVE COUNTERTOP OR BACKSPLASH
"WP" INDICATES WEATHERPROOF
"XP" INDICATES EXPLOSION PROOF
"U" INDICATES USB CHARGER
"R" INDICATES EXISTING DEVICE REMOVED AND RELOCATED
LOWER CASE LETTER BY SWITCHES AND FIXTURES INDICATE ASSOCIATED UNIT FOR SWITCHING

REFERENCE LEGEND

ROOM NUMBER
ROOM NAME — ROOM NAME DESIGNATION
101 — ROOM NUMBER DESIGNATION
150 SF — ROOM AREA DESIGNATION

SCHEDULED EQUIPMENT
XX — EQUIPMENT SIZE (WHERE APPLICABLE)
XXXX — EQUIPMENT NUMBER
XX-XX — PANEL & CIRCUIT NUMBER

NON-SCHEDULED EQUIPMENT
EQUIPMENT — EQUIPMENT NAME/NUMBER
XX-XX — PANEL & CIRCUIT NUMBER

REFERENCE DEMOLITION NOTE
DX — DEMOLITION DESIGNATION

REFERENCE NOTE
X — REFERENCE DESIGNATION

PLAN DETAIL
X — DETAIL NUMBER
XX-XX — SHEET NUMBER

SECTION/ DETAIL
SIM
X — SECTION/DETAIL NUMBER
XX-XX — SHEET NUMBER
INDICATES DIRECTION OF VIEW

NEW COLUMN
X — LETTER INDICATES NEW COLUMN LINE

EXISTING COLUMN
X — LETTER INDICATES EXISTING COLUMN LINE

MATCHLINE
AREA A
AREA B

LEVEL
NAME
ELEVATION
LEVEL CALLOUT DESIGNATION
ELEVATION DESIGNATION

TITLE MARKER
GRAPHIC AREA FOR DRAWING
1 VIEW NAME
SCALE: 1/8" = 1'-0"
DETAIL NUMBER
TITLE
SCALE OF THE DRAWING

NORTH ARROW
NORTH
PLAN NORTH
TRUE NORTH

ABBREVIATIONS

ACSR	ALUMINUM CONDUCTOR STEEL REINFORCED
AFF	ABOVE FINISH FLOOR
AIC	AMPS INTERRUPTING CAPACITY (SYM RMS)
AL	ALUMINUM
ALT	ALTERNATE
AMP	AMPERE
ANSI	AMERICAN NATIONAL STANDARDS INSTITUTE
APPROX	APPROXIMATE
AUTO	AUTOMATIC
AVG	AVERAGE
AWG	GAUGE
L	ANGLE
BKR	BREAKER
C OR CL	CENTER LINE
C OR CND	CONDUIT (ELECTRICAL SHEETS)
CKT	CIRCUIT
CLG	CEILING
COL	COLUMN
CONC	CONCRETE
CONF	CONFERENCE
CPT	CONTROL POWER TRANSFORMER
CUH	CABINET UNIT HEATER
DC	DIRECT CURRENT
DEG	DEGREE
DEMO	DEMOLITION
DIA	DIAMETER
DIM	DIMENSION
DISC	DISCONNECT
DIST	DISTRIBUTION
DN	DOWN
DWG	DRAWING
E	EAST
EA	EACH
EL OR ELEV	ELEVATION - GRADE OR BUILDING
ELEC	ELECTRIC OR ELECTRICAL
ELEV	ELEVATOR
EMD	ESTIMATED MAXIMUM DEMAND
EMI	ELECTROMAGNETIC INTERFERENCE
ENCL	ENCLOSURE
EQUIP	EQUIPMENT
EST	ESTIMATE
EWC	ELECTRIC WATER COOLER
EXIST	EXISTING
EXP	EXPOSED
EXT	EXTERIOR
FA	FIRE ALARM
FAAP	FIRE ALARM ANNUNCIATOR PANEL
FACP	FIRE ALARM CONTROL PANEL
FAEP	FIRE ALARM EXTENDER PANEL
FLA	FULL LOAD AMPS
FLEX	FLEXIBLE
FLUOR	FLUORESCENT
GFCI	GROUND FAULT CIRCUIT INTERRUPTER
GFI	GROUND FAULT CIRCUIT INTERRUPTER
HP	HORSE POWER
HR	HOUR
HTG	HEATING
HTR	HEATER
HZ	HERTZ
ID	INSIDE DIAMETER
IES	ILLUMINATING ENGINEERING SOCIETY
IN	INCH
INSUL	INSULATION
INT	INTERIOR
KCMIL KCM	KILO CIRCULAR MIL
KV	KILOVOLTS
KVA	KILOVOLT AMPERES
KVAR	KILOVOLT AMPERES REACTIVE
KW	KILOWATT
LBS	POUNDS
LRA	LOCKED ROTOR AMPS
LTG	LIGHTING
MAX	MAXIMUM
MECH	MECHANICAL
MCCB	MOLDED CASE CIRCUIT BREAKER
MFR	MANUFACTURER
MG	MOTOR GENERATOR
MH	MANHOLE
MIN	MINIMUM
MISC	MISCELLANEOUS
N	NORTH
NC	NORMALLY CLOSED
NEC	NATIONAL ELECTRICAL CODE
NEMA	NATIONAL ELECTRICAL MANUFACTURERS ASSOCIATION
NFPA	NATIONAL FIRE PROTECTION ASSOCIATION
NIC	NOT IN CONTRACT
NO	NORMALLY OPEN
NO	NUMBER
NTS	NOT TO SCALE
OCPD	OVERCURRENT PROTECTIVE DEVICE
OD	OUTSIDE DIAMETER
OH	OVERHEAD
OPNG	OPENING
PH	PHASE
PIV	POST INDICATING VALVE
PNL	PANEL
PSI	POUNDS PER SQUARE IN.
QTY	QUANTITY
REC	RECEPTACLE
REFR	REFRIGERATOR
REINF	REINFORCEMENT
REQD	REQUIRED
RFI	RADIO FREQUENCY INTERFERENCE
S	SOUTH
SCHED	SCHEDULE
SCCR	SHORT CIRCUIT CURRENT RATING
SF	SQUARE FOOT (FEET)
SPD	SURGE PROTECTIVE DEVICE
SPDT	SINGLE POLE, DOUBLE THROW
SPEC	SPECIFICATIONS
SPKR	SPEAKER
SQ	SQUARE
STD	STANDARD
STL	STEEL
SW	SWITCH
SWBD	SWITCH BOARD
SYM	SYMMETRICAL
TEL	TELEPHONE
TEMP	TEMPERATURE
TVSS	TRANSIENT VOLTAGE SURGE SUPPRESSOR
TYP	TYPICAL
UG	UNDERGROUND
UH	UNIT HEATER
UL	UNDERWRITERS LABORATORIES
UPS	UNINTERRUPTIBLE POWER SYSTEM
VFD	VARIABLE FREQUENCY DRIVE
VFC	VARIABLE FREQUENCY CONTROLLER
W	WEST
W/	WITH
W/O	WITHOUT
WHM	WATTHOUR METER
WT	WEIGHT
XFMR	TRANSFORMER

GENERAL DEMO NOTES

GENERAL NOTES

A. DRAWINGS DO NOT SHOW TOTAL NUMBER OF CONDUCTORS FOR CIRCUITS REQUIRED. PROVIDE THE NUMBER OF CONDUCTORS NEEDED TO COMPLETE INSTALLATION OF SPECIFIC EQUIPMENT FURNISHED. A GREEN GROUND CONDUCTOR, SIZED PER NEC, SHALL ALSO BE INCLUDED IN EACH CIRCUIT. ADJUST CONDUCTOR SIZES AS NEEDED TO LIMIT VOLTAGE DROP TO LEVELS RECOMMENDED BY NEC. COORDINATE INSPECTIONS WITH THE OWNER AND AHJ.

B. SEE ARCHITECTURAL SHEETS FOR REFLECTED CEILING PLANS.

C. ALL CIRCUITS SHALL HAVE SEPARATE NEUTRAL WIRES BUT CAN SHARE AN INSULATED GREEN GROUND WIRE IN MINIMUM 3/4" EMT CONDUIT.

D. NO BOXES SHALL BE MOUNTED BACK TO BACK.

E. SEAL ALL PENETRATIONS THROUGH FIRE OR FIRE/SMOKE RATED WALLS AND FLOORS.

F. ALL RACEWAYS SHALL BE SEALED AS REQUIRED BY AND IN ACCORDANCE WITH NEC PARAGRAPHS 230.8, 300.5(G) AND 300.7(A). ALL RACEWAYS SHALL BE SEALED AS REQUIRED BY NEC AND NFPA.

G. CABLE AND CONDUIT SHALL NOT INTERFERE WITH EQUIPMENT ACCESS.

H. ALL CABLING ABOVE CEILING SHALL BE PROPERLY SUPPORTED (NOT FROM CEILING SYSTEM).

I. COORDINATE FINAL PANELBOARD DIRECTORIES WITH ENGINEER AND OWNER.

GENERAL LIGHTING NOTES

A. COORDINATE LOCATION OF SWITCH HEIGHTS WITH CASEWORK, FURNITURE AND EQUIPMENT LAYOUTS PRIOR TO ROUGH-IN. SEE ARCHITECTURAL CASEWORK ELEVATIONS FOR CABINET HEIGHTS AND LAYOUTS.

B. ALL OCCUPANCY SENSORS AND OCCUPANCY SENSOR SWITCHES SHALL BE DUAL TECHNOLOGY (INFRARED AND ULTRASONIC). OCCUPANCY SENSORS DO NOT SHOW RELAYS AND TOTAL WIRING REQUIRED FOR PROPER OPERATION. PROVIDE A COMPLETE AND FULLY FUNCTIONAL SYSTEM.

C. EMERGENCY, EXIT, AND NIGHT LIGHTS IN PATHS OF EGRESS SHALL BE CONNECTED TO AN UNSWITCHED HOT LEG OF CIRCUIT SHOWN UNLESS NOTED OTHERWISE.

D. LIGHTING CONTROL FOR ALL AREAS SHALL BE PROGRAMMED AS MANUAL-ON / AUTOMATIC-OFF UNLESS NOTED OTHERWISE. AUTOMATIC-ON / AUTOMATIC-OFF PERMITTED IN BATHROOMS, CORRIDORS, LOBBIES, SECURITY AREAS, AND AREAS WHERE MANUAL-ON WOULD ENDANGER OCCUPANT SAFETY AS DICTATED BY OWNER.

E. ALL DIMMERS SHALL BE SET TO 50% START LEVEL UNLESS NOTED OTHERWISE.

F. THE LIGHTING SUBMITTALS SHALL BE PREPARED AND SUBMITTED BY AN AUTHORIZED FACTORY REPRESENTATIVE OR THE SUBMITTALS WILL BE REJECTED.

GEN. POWER & AUX SYSTEMS NOTES

A. ALL DEVICES SHOWN SHALL BE MOUNTED AT 18" A.F.F. UNLESS INDICATED OTHERWISE.

B. ALL PHONE/DATA JACKS SHOWN SHALL BE ROUGH-IN BOXES AND STUB UP 1" CONDUITS TO ABOVE ACCESSIBLE CEILING. PROVIDE PULL STRING WITH PLASTIC BUSHING. PHONE/DATA DEVICES, FACEPLATES, CABLES, INSTALLATION, AND TERMINATION BY OTHERS. ALL BOXES SHALL HAVE BOX SUPPORTS.

C. ALL AUXILIARY CABLE ABOVE CEILING SHALL BE PLENUM RATED WHERE REQUIRED.

D. PROVIDE 120 VOLT POWER CIRCUIT(S) FOR AUXILIARY SYSTEMS AS REQUIRED FOR COMPLETE AND OPERATIONAL SYSTEMS.

REF. DEMO NOTES (DX)

PROJECT ELECTRICAL REFERENCED DEMOLITION NOTES

REF. NOTES (X)

PROJECT ELECTRICAL REFERENCED NOTES

1 PROVIDE LIGHTING TIMER WITH PROGRAMMABLE ASTRONOMICAL TIMING FOR EXTERIOR LIGHTING CONTROL.

20 METER CENTER TO HAVE THREE (3) 400 AMP METERS FOR FUTURE TENANTS AND ONE (1) 200 AMP METER FOR HOUSE LOADS, PANELBOARD 'L1'.

21 STUB UP TWO 2 1/2" CONDUITS PER TENANT SPACE ALONG NORTH WALL FOR FUTURE EXTENSION TO A FUTURE 400 AMP PANELBOARD.

22 SEE CIVIL SITE UTILITIES PLAN FOR UTILITY FEEDER TO THE UTILITY TRANSFORMER AND OTHER EXISTING AND NEW UNDERGROUND UTILITIES.

23 SEE E101 FOR BUILDING MOUNTED LUMINAIRES.

24 SEE E301 ELECTRICAL SITE PLAN FOR CONTINUANCE.

ELECTRICAL SHEET LIST

DESIGNED: JEF
DRAWN: JEF
CHECKED: KJS

ISSUE DATE: 10/18/2024
REVISIONS:

No.:	DATE:	BY:	DESCRIPTION:

10/18/2024

SCHEMMER
Design with Purpose. Build with Confidence.
1044 North 115th Street, Suite 300, Omaha, Nebraska 68154 | 402.493.4800
CA0666

LANOHA DEVELOPMENT
HAWTHORNE COURT MULTI-TENANT BUILDING
17662 WELCH PLAZA
OMAHA, NE 68154

ELECTRICAL INFO SHEET

PROJECT NO.: 010347.001

E 00

DIVISION 26 - ELECTRICAL
SECTION 26-05-00 - COMMON RESULTS

PART 1 - GENERAL

1.1 RELATED DOCUMENTS

A. Drawings and general provisions of the Contract, including General and Supplementary Conditions and Division 01 Specification Sections, apply to this Section.

1.2 SUMMARY

A. Sections Included: Refer to Table of Contents.

1.3 REFERENCES

A. National Electrical Contractors Association (NECA).

B. National Electrical Manufacturer's Association (NEMA).

C. National Electrical Testing Association (NETA).

D. National Fire Protection Association (NFPA).

1. NFPA 70 – National Electrical Code.

1.4 DEFINITIONS

A. See info sheet.

1.5 ACTION SUBMITTALS

A. Product Data: For each of the following products.

1. Lighting Control Devices.
2. Panelboards and Circuit Breakers.
3. Wiring Devices.
4. Enclosed Switches.
5. Lighting.

B. Shop Drawings: For each of the following products.

1. Lighting Control Devices.
2. Panelboards and Circuit Breakers.
3. Enclosed Switches.

C. Submittals shall be grouped and submitted by spec section or they will be rejected.

1.6 CLOSEOUT SUBMITTALS

A. Operation and Maintenance Data: For each of the following products.

1. Lighting Control Devices.
2. Panelboards and Circuit Breakers.
3. Wiring Devices.
4. Fuses.
5. Enclosed Switches.
6. Lighting.

B. A single submittal containing all O&M data submitted under Section 260500 "Common Results" preferred.

1.7 MAINTENANCE MATERIAL SUBMITTALS

A. Furnish extra materials that match products installed and that are packaged with protective covering for storage and identified with labels describing contents.

1. Keys: Two spares for each type of panelboard cabinet lock.
2. Circuit Breakers Including GFCI Types: Two spares for each panelboard.
3. Fuses: Equal to 10 percent of quantity installed for each size and type, but no fewer than three of each size and type.
4. Fuse Pullers: For each size of fuse, where applicable and available, from fuse manufacturer.
5. Control Power Fuses: Equal to 10 percent of quantity installed for each size and type, but no fewer than two of each size and type.
6. Indicating Lights: Two of each type and color installed.
7. Auxiliary Contacts: Furnish one spare(s) for each size and type of magnetic controller installed.
8. Power Contacts: Furnish three spares for each size and type of magnetic contactor installed.

1.8 DELIVERY, STORAGE, AND HANDLING

A. Store equipment indoors in clean, dry space with uniform temperature to prevent condensation. Protect controllers from exposure to dirt, fumes, water, corrosive substances, and physical damage.

1.9 FIELD CONDITIONS

A. Environmental Limitations:

1. Rate equipment for continuous operation under the following conditions unless otherwise indicated:
   a. Ambient Temperature: Not exceeding 23 deg F to plus 104 deg F.
   b. Altitude: Not exceeding 6600 feet.

B. Where ambient temperature to which fuses are directly exposed is less than 40 deg F or more than 100 deg F, apply manufacturer's ambient temperature adjustment factors to fuse ratings.

C. Interruption of Existing Electric Service: Do not interrupt electric service to facilities occupied by Owner or others unless permitted under the following conditions and then only after arranging to provide temporary electric service according to requirements indicated:

1. Notify Owner no fewer than seven days in advance of proposed interruption of electric service.
2. Do not proceed with interruption of electric service without Owner's written permission.
3. Comply with NFPA 70E.

1.10 WARRANTY

A. Manufacturer's Warranty: Manufacturer and Installer agree to repair or replace the following products that fail in materials or workmanship within a period of one year from date of substantial completion.

1. Panelboards and Circuit Breakers.
2. Enclosed Switches.

B. Special Warranty: Manufacturer's standard form in which Manufacturer agrees to repair or replace the following products that fail in materials or workmanship within specified warranty period from date of substantial completion. Full warranty shall apply for the entire warranty period.

1. Lighting Control Devices: Two years.
2. Lighting: Five years.

PART 2 - PRODUCTS

2.1 GENERAL REQUIREMENTS

A. Source Limitations: Obtain electrical gear, components, and accessories, within same product category, from single manufacturer.

B. Product Selection for Restricted Space: Drawings indicate maximum dimensions for enclosed switches and circuit breakers, including clearances between enclosures, and adjacent surfaces and other items. Comply with indicated maximum dimensions.

C. Electrical Components, Devices, and Accessories: Listed and labeled as defined in NFPA 70, by an NRTL, and marked for intended location and application.

D. Comply with NFPA 70.

E. All electrical materials shall be new. Use of reconditioned, remanufactured, or second-hand materials is not permitted without prior written approval from the Engineer.

2.2 EQUIPMENT MANUFACTURERS

A. Applies to the following products:

1. Panelboards and Circuit Breakers.
2. Enclosed Switches.

B. Manufacturers: Subject to compliance with requirements, provide products by one of the following:

1. ABB/GE.
2. Eaton.
3. Siemens.
4. Square D.

PART 3 - EXECUTION

3.1 APPLICATION

A. Comply with the following standards for application and installation requirements, except where requirements on drawings or specifications are stricter:

1. NECA 1.
2. NEMA 101.
3. NFPA 70.

3.2 ENCLOSURE ENVIRONMENTAL RATING APPLICATIONS

A. Provide enclosures at installed locations with the following environmental ratings.

1. Indoor, Dry and Clean Locations: NEMA 250, Type 1.
2. Outdoor Locations: NEMA 250, Type 3R.
3. Other Wet or Damp, Indoor Locations: NEMA 250, Type 4.
4. Indoor Locations Subject to Dust, Falling Dirt, and Dripping Noncorrosive Liquids: NEMA 250, Type 12.

3.3 FIELD QUALITY CONTROL

A. Perform standard NETA ATS tests and inspections for the following products:

1. Low-Voltage Power and Control Conductors and Cables.
2. Grounding and Bonding.
3. Panelboards.
4. Circuit Breakers (including GFCI).
5. Enclosed Switches.

B. Perform optional NETA ATS tests and inspections for the following products:

1. Low-Voltage Power and Control Conductors and Cables.
2. Panelboards.
3. Circuit Breakers (including GFCI).

C. Manufacturer's Field Service: Engage a factory-authorized service representative to test and inspect components, assemblies, and equipment installations, including connections for the following products:

1. Lighting Control Devices.

D. Perform the following tests and inspections for wiring devices:

1. Line Voltage: Acceptable range is 105 to 132 V.
2. Percent Voltage Drop under 15-A Load: A value of 6 percent or higher is unacceptable.
3. Ground Impedance: Values of up to 2 ohms are acceptable.
4. GFCI Trip: Test for tripping values specified in UL 1436 and UL 943.
5. Using the test plug, verify that the device and its outlet box are securely mounted.
6. Tests shall be diagnostic, indicating damaged conductors, high resistance at the circuit breaker, poor connections, inadequate fault-current path, defective devices, or similar problems. Correct circuit conditions, remove malfunctioning units and replace with new ones, and retest as specified above.

E. Perform the following tests and inspections for lighting:

1. Operational Test: After installing luminaires, switches, and accessories, and after electrical circuitry has been energized, test units to confirm proper operation.
2. Test for Emergency Lighting: Interrupt power supply to demonstrate proper operation. Verify transfer from normal power to battery power and retransfer to normal.

F. Products will be considered defective if they do not pass tests and inspections.

G. Prepare test and inspection reports to record the following:

1. Procedures used.
2. Results that comply with requirements.
3. Results that do not comply with requirements, and corrective action taken to achieve compliance with requirements.

3.4 STARTUP SERVICE

A. Complete startup checks according to manufacturer's written instructions for the following products:

1. Lighting.
   a. Charge emergency power units and batteries minimum of one hour and depress switch to conduct short-duration test.
   b. Charge emergency power units and batteries minimum of 24 hours and conduct one-hour discharge test.

B. Engage a factory-authorized service representative to perform startup service for the following products:

1. Lighting Control Devices.

3.5 ADJUSTING

A. Occupancy Adjustments: When requested within 12 months from date of Substantial Completion, provide on-site assistance in adjusting lighting, lighting control devices, and relay-based lighting control to suit actual occupied conditions. Provide up to two visits to Project during other-than-normal occupancy hours for this purpose.

3.6 DEMONSTRATION

A. Engage a factory-authorized service representative to train Owner's maintenance personnel to adjust, operate, and maintain the following products:

1. Lighting Control Devices.

3.7 SIGNS

A. Warning signs: Baked-Enamel Signs.

B. Warning signs shall include, but are not limited to, the following legends:

1. Multiple Power Source Warning: "DANGER - ELECTRICAL SHOCK HAZARD - EQUIPMENT HAS MULTIPLE POWER SOURCES."
2. Workspace Clearance Warning: "WARNING - OSHA REGULATION - AREA IN FRONT OF ELECTRICAL EQUIPMENT MUST BE KEPT CLEAR FOR 36 INCHES."
3. Entrances to dedicated Electrical Rooms: "DANGER - ELECTRICAL ROOM – NO STORAGE PERMITTED."

3.8 LABELS

A. Equipment Labels: Laminated acrylic sign.

B. Equipment to be labeled including existing to remain equipment:

1. Panelboards.
2. Enclosures and electrical cabinets.
3. Access doors and panels for concealed electrical items.
4. Emergency system boxes and enclosures.
5. Enclosed switches.
6. Enclosed controllers.
7. Variable-speed controllers.
8. Push-button stations.
9. Monitoring and control equipment.

SECTION 26-05-19 - LOW-VOLTAGE POWER AND CONTROL CONDUCTORS AND CABLES

PART 1 - GENERAL

1.1 SUMMARY

A. Section Includes:

1. Copper building wire rated 600 V or less.
2. Connectors, splices, and terminations rated 600 V and less.

PART2 - PRODUCTS

2.1 - COPPER BUILDING WIRE

A. Description: Flexible, insulated and uninsulated, drawn copper current-carrying conductor with an overall insulation layer or jacket, or both, rated 600 V or less.

B. Standards:

1. Conductor and Cable Marking: Comply with wire and cable marking according to UL's "Wire and Cable Marking and Application Guide."

C. Conductors: Copper, complying with ASTM B 3 for bare annealed copper and with ASTM B 8 for stranded conductors. Minimum sizes as follows:

1. Power Circuits: No. 12 AWG.
2. Class 1 remote-control and signal circuits; No 14 AWG.
3. Class 2 low-energy, remote-control, and signal circuits; No. 16 AWG.
4. Class 3 low-energy, remote-control, alarm, and signal circuits; No 12 AWG.

D. Conductor Insulation:

1. Type THHN and Type THWN-2: Comply with UL 83.
2. Type XHHW-2: Comply with UL 44.

E. VFD Cable: As shown on drawings.

2.2 CONNECTORS AND SPLICES

A. Description: Factory-fabricated connectors, splices, and lugs of size, ampacity rating, material, type, and class for application and service indicated.

B. Lugs: One piece, seamless, designed to terminate conductors specified in this Section.

1. Material: Copper.
2. Type: Two hole with long barrels.
3. Termination: Compression.

PART 3 - EXECUTION

3.1 CONDUCTOR MATERIAL APPLICATIONS

A. Copper: Solid for No. 10 AWG and smaller; stranded for No. 8 AWG and larger. No. 12 AWG minimum.

3.2 CONDUCTOR INSULATION AND MULTICONDUCTOR CABLE APPLICATIONS AND WIRING METHODS

A. Feeders and Branch Circuits: Type THHN/THWN-2, single conductors in raceway.

B. Cord Drops and Portable Appliance Connections: Type SO, hard service cord with stainless-steel, wire-mesh, strain relief device at terminations to suit application.

3.3 INSTALLATION OF CONDUCTORS AND CABLES

A. Use manufacturer-approved pulling compound or lubricant where necessary; compound used must not deteriorate conductor or insulation. Do not exceed manufacturer's recommended maximum pulling tensions and sidewall pressure values.

B. Use pulling means, including fish tape, cable, rope, and basket-weave wire/cable grips, that will not damage cables or raceway.

3.4 CONNECTIONS

A. Tighten electrical connectors and terminals according to manufacturer's published torque-tightening values. If manufacturer's torque values are not indicated, use those specified in UL 486A-486B.

B. Make splices, terminations, and taps that are compatible with conductor material and that possess equivalent or better mechanical strength and insulation ratings than unspliced conductors.

C. Wiring at Outlets: Install conductor at each outlet, with at least 6 inches of slack.

SECTION 26-05-26 - GROUNDING AND BONDING

PART 1 - GENERAL

1.1 SUMMARY

A. Section includes grounding and bonding systems and equipment.

PART 2 - PRODUCTS

2.1 SYSTEM DESCRIPTION

A. Comply with UL 467 for grounding and bonding materials and equipment

2.2 CONDUCTORS

A. Insulated Conductors: Copper or tinned-copper wire or cable insulated for 600 V unless otherwise required by applicable Code or authorities having jurisdiction.

B. Bare Copper Conductors:

1. Solid Conductors: ASTM B 3.
2. Stranded Conductors: ASTM B 8.
3. Tinned Conductors: ASTM B 33.
4. Bonding Conductor: No. 4 or No. 6 AWG, stranded conductor.

C. Grounding Bus: As shown on drawings.

2.3 CONNECTORS

A. Welded Connectors: Exothermic-welding kits of types recommended by kit manufacturer for materials being joined and installation conditions.

B. Bus-Bar Connectors: Compression type, copper, long-barrel, two-bolt connection to ground bus bar.

C. Beam Clamps: Mechanical type, terminal, ground wire access from four directions, with dual, tin-plated or silicon bronze bolts.

D. Cable-to-Cable Connectors: Compression type, copper or copper alloy.

E. Conduit Hubs: Mechanical type, terminal with threaded hub.

F. Ground Rod Clamps: Mechanical type, copper or copper alloy, terminal with hex head bolt.

G. U-Bolt Clamps: Mechanical type, copper or copper alloy, terminal listed for direct burial.

H. Water Pipe Clamps:

1. Mechanical type, two pieces with stainless-steel bolts.
   a. Material: Bronze.
   b. Listed for direct burial.

2.4 GROUNDING ELECTRODES

A. Ground Rods: Copper-clad steel; 5/8 by 96 inches.

PART 3 - EXECUTION

3.1 APPLICATIONS

A. Conductors: Install solid conductor for No. 8 AWG and smaller, and stranded conductors for No. 6 AWG and larger unless otherwise indicated.

B. Conductor Terminations and Connections:

1. Pipe and Equipment Grounding Conductor Terminations: Bolted connectors.
2. Underground Connections: Welded connectors except at test wells and as otherwise indicated.
3. Connections to Structural Steel: Welded connectors.

3.2 EQUIPMENT GROUNDING

A. Install insulated equipment grounding conductors with all feeders and branch circuits.

B. Air-Duct Equipment Circuits: Install insulated equipment grounding conductor to duct-mounted electrical devices operating at 120 V and more, including air cleaners, heaters, dampers, humidifiers, and other duct electrical equipment. Bond conductor to each unit and to air duct and connected metallic piping.

C. Water Heater, Heat-Tracing, and Antifrost Heating Cables: Install a separate insulated equipment grounding conductor to each electric water heater and heat-tracing cable. Bond conductor to heater units, piping, connected equipment, and components.

3.3 INSTALLATION

A. Grounding Conductors: Route along shortest and straightest paths possible unless otherwise indicated or required by Code. Avoid obstructing access or placing conductors where they may be subjected to strain, impact, or damage.

B. Ground Rods: Drive rods until tops are 2 inches below finished floor or final grade unless otherwise indicated.

1. Interconnect ground rods with grounding electrode conductor below grade and as otherwise indicated. Make connections without exposing steel or damaging coating if any.
2. Use exothermic welds for all below-grade connections.
3. For grounding electrode system, install at least three rods spaced at least one-rod length from each other and located at least the same distance from other grounding electrodes, and connect to the service grounding electrode conductor.

C. Bonding Jumpers: Install in locations accessible for inspection and maintenance except where routed through short lengths of conduit.

1. Bonding to Structure: Bond straps directly to basic structure, taking care not to penetrate any adjacent parts.
2. Bonding to Equipment Mounted on Vibration Isolation Hangers and Supports: Install bonding so vibration is not transmitted to rigidly mounted equipment.
3. Use exothermic-welded connectors for outdoor locations; if a disconnect-type connection is required, use a bolted clamp.

D. Grounding for Steel Building Structure: Install a driven ground rod at base of each corner column and at intermediate exterior columns at distances not more than 60 feet apart.

E. Connections: Make connections so possibility of galvanic action or electrolysis is minimized. Select connectors, connection hardware, conductors, and connection methods so metals in direct contact are galvanically compatible.

1. Use electroplated or hot-tin-coated materials to ensure high conductivity and to make contact points closer in order of galvanic series.
2. Make connections with clean, bare metal at points of contact.
3. Make aluminum-to-steel connections with stainless-steel separators and mechanical clamps.
4. Make aluminum-to-galvanized-steel connections with tin-plated copper jumpers and mechanical clamps.
5. Coat and seal connections having dissimilar metals with inert material to prevent future penetration of moisture to contact surfaces.

SECTION 26-05-29 - HANGERS AND SUPPORTS

PART 1 - GENERAL

1.1 SUMMARY

A. Section Includes:

1. Steel slotted support systems.
2. Conduit and cable support devices.
3. Support for conductors in vertical conduit.
4. Mounting, anchoring, and attachment components, including powder-actuated fasteners, mechanical expansion anchors, concrete inserts, clamps, through bolts, toggle bolts, and hanger rods.

PART 2 - PRODUCTS

2.1 SUPPORT, ANCHORAGE, AND ATTACHMENT COMPONENTS

A. Steel Slotted Support Systems: Preformed steel channels and angles with minimum 13/32-inch-diameter holes at a maximum of 8 inches o.c. in at least one surface.

1. Standard: Comply with MFMA-4 factory-fabricated components for field assembly.
2. Material for Channel, Fittings, and Accessories: Galvanized steel.
3. Channel Width: 1-5/8 inches.

B. Conduit and Cable Support Devices: Steel hangers, clamps, and associated fittings, designed for types and sizes of raceway or cable to be supported.

C. Mounting, Anchoring, and Attachment Components: Items for fastening electrical items or their supports to building surfaces include the following:

1. Mechanical-Expansion Anchors: Insert-wedge-type, zinc-coated steel, for use in hardened portland cement concrete, with tension, shear, and pullout capacities appropriate for supported loads and building materials where used.
2. Concrete Inserts: Steel or malleable-iron, slotted support system units are similar to MSS Type 18 units and comply with MFMA-4 or MSS SP-58.
3. Clamps for Attachment to Steel Structural Elements: MSS SP-58 units are suitable for attached structural element.
4. Through Bolts: Structural type, hex head, and high strength. Comply with ASTM F 3125/F 3125M,Grade A325.
5. Toggle Bolts: All-steel springhead type.
6. Hanger Rods: Threaded steel.

PART 3 - EXECUTION

3.1 APPLICATION

A. Maximum Support Spacing and Minimum Hanger Rod Size for Raceways: Space supports for EMT and GRC as required by NFPA 70. Minimum rod size shall be 1/2 inch in diameter.

B. Multiple Raceways or Cables: Install trapeze-type supports fabricated with steel slotted support system, sized so capacity can be increased by at least 25 percent in future without exceeding specified design load limits.

1. Secure raceways and cables to these supports with two-bolt conduit clamps.

3.2 SUPPORT INSTALLATION

A. Raceway Support Methods: In addition to methods described in NECA 1, EMT and GRC may be supported by openings through structure members, according to NFPA 70.

B. Strength of Support Assemblies: Where not indicated, select sizes of components so strength will be adequate to carry present and future static loads within specified loading limits. Minimum static design load used for strength determination shall be weight of supported components plus 200 lb.

C. Mounting and Anchorage of Surface-Mounted Equipment and Components: Anchor and fasten electrical items and their supports to building structural elements by the following methods unless otherwise indicated by code:

1. To Wood: Fasten with lag screws or through bolts.
2. To New Concrete: Bolt to concrete inserts.
3. To Masonry: Approved toggle-type bolts on hollow masonry units and expansion anchor fasteners on solid masonry units.
4. To Existing Concrete: Expansion anchor fasteners.
5. To Steel: Welded threaded studs complying with AWS D1.1/D1.1M, with lock washers and nuts.
6. To Light Steel: Sheet metal screws.
7. Items Mounted on Hollow Walls and Nonstructural Building Surfaces: Mount cabinets, panelboards, disconnect switches, control enclosures, pull and junction boxes, transformers, and other devices on slotted-channel racks attached to substrate.

D. Drill holes for expansion anchors in concrete at locations and to depths that avoid the need for reinforcing bars.

3.3 PAINTING

A. Touchup: Clean field welds and abraded areas of shop paint. Paint exposed areas immediately after erecting hangers and supports. Use same materials as used for shop painting. Comply with SSPC-PA 1 requirements for touching up field-painted surfaces.

1. Apply paint by brush or spray to provide minimum dry film thickness of 2.0 mils.

B. Galvanized Surfaces: Clean welds, bolted connections, and abraded areas and apply galvanizing-repair paint to comply with ASTM A 780.

SECTION 26-05-33 - ABOVEGROUND RACEWAYS AND BOXES

PART 1 - GENERAL

1.1 SUMMARY

A. Section Includes:

1. Metal conduits and fittings.
2. Boxes, enclosures, and cabinets.

PART 2 - PRODUCTS

2.1 METAL CONDUITS AND FITTINGS

A. Metal Conduit:

1. GRC: Comply with ANSI C80.1 and UL 6.
2. EMT: Comply with ANSI C80.3 and UL 797.
3. FMC: Comply with UL 1; zinc-coated steel.
4. LFMC: Flexible steel conduit with PVC jacket and complying with UL 360.

B. Metal Fittings:

1. Comply with NEMA FB 1 and UL 514B.
2. Fittings, General: Listed and labeled for type of conduit, location, and use.
3. Fittings for EMT:
   a. Material: Steel.
   b. Type: Setscrew or compression.

C. Joint Compound for GRC: Approved, as defined in NFPA 70, by authorities having jurisdiction for use in conduit assemblies, and compounded for use to lubricate and protect threaded conduit joints from corrosion and to enhance their conductivity.

2.2 BOXES, ENCLOSURES, AND CABINETS

A. General Requirements for Boxes, Enclosures, and Cabinets: Boxes, enclosures, and cabinets installed in wet locations shall be listed for use in wet locations.

B. Sheet Metal Outlet and Device Boxes: Comply with NEMA OS 1 and UL 514A.

C. Cast-Metal Outlet and Device Boxes: Comply with NEMA FB 1, ferrous alloy, Type FD, with gasketed cover.

D. Luminaire Outlet Boxes: Nonadjustable, designed for attachment of luminaire weighing 50 lb. Outlet boxes designed for attachment of luminaires weighing more than 50 lb shall be listed and marked for the maximum allowable weight.

E. Small Sheet Metal Pull and Junction Boxes: NEMA OS 1.

F. Cast-Metal Access, Pull, and Junction Boxes: Comply with NEMA FB 1 and UL 1773, galvanized, cast iron with gasketed cover.

G. Box extensions used to accommodate new building finishes shall be of same material as recessed box.

H. Device Box Dimensions: 4 inches square by 2-1/8 inches deep.

I. Gangable boxes are prohibited.

J. Hinged-Cover Enclosures: Comply with UL 50 and NEMA 250, with continuous-hinge cover with flush latch unless otherwise indicated.

1. Metal Enclosures: Steel, finished inside and out with manufacturer's standard enamel.
2. Nonmetallic Enclosures: Fiberglass.
3. Interior Panels: Steel; all sides finished with manufacturer's standard enamel.

PART 3 - EXECUTION

3.1 RACEWAY APPLICATION

A. Outdoors: Apply raceway products as specified below unless otherwise indicated:

1. All: GRC.
2. Connection to Vibrating Equipment (Including Transformers and Hydraulic, Pneumatic, Electric Solenoid, or Motor-Driven Equipment): LFMC.

B. Indoors: Apply raceway products as specified below unless otherwise indicated:

1. Damp, Wet, or Exposed and Subject to Severe Physical Damage: GRC. Raceway locations include the following:
   a. Loading dock.
   b. Corridors used for traffic of mechanized carts, forklifts, and pallet-handling units.
   c. Mechanical rooms.
2. All Others: EMT or GRC.
3. Connection to Vibrating Equipment (Including Transformers and Hydraulic, Pneumatic, Electric Solenoid, or Motor-Driven Equipment): FMC, except use LFMC in damp or wet locations.

C. Embedded in Slab: Comply with Section 260543 "Underground Raceways and Boxes.

D. Minimum Raceway Size: 3/4-inch trade size.

E. Raceway Fittings: Compatible with raceways and suitable for use and location.

1. GRC: Use threaded rigid steel conduit fittings unless otherwise indicated. Comply with NEMA FB 2.10.
2. EMT: Use setscrew or compression, steel fittings. Comply with NEMA FB 2.10.
3. Flexible Conduit: Use only fittings listed for use with flexible conduit. Comply with NEMA FB 2.20.

3.2 INSTALLATION

A. Do not install raceways or electrical items on any "explosion-relief" walls or rotating equipment.

B. Do not fasten conduits onto the bottom side of a metal deck roof.

C. Keep raceways at least 6 inches away from parallel runs of flues and steam or hot-water pipes. Install horizontal raceway runs above water and steam piping.

D. Complete raceway installation before starting conductor installation.

E. Install no more than the equivalent of three 90-degree bends in any conduit run except for control wiring conduits, for which fewer bends are allowed. Support within 12 inches of changes in direction.

F. Make bends in raceway using large-radius preformed ells. Field bending shall be according to NFPA 70 minimum radii requirements. Use only equipment specifically designed for material and size involved.

G. Conceal conduit within finished walls, ceilings, and floors unless otherwise indicated. Install conduits parallel or perpendicular to building lines.

H. Support conduit within 12 inches of enclosures to which attached.

I. Stub-Ups to Above Recessed Ceilings:

1. Use EMT, IMC, or RMC for raceways.
2. Use a conduit bushing or insulated fitting to terminate stub-ups not terminated in hubs or in an enclosure.

J. Threaded Conduit Joints, Exposed to Wet, Damp, Corrosive, or Outdoor Conditions: Apply listed compound to threads of raceway and fittings before making up joints. Follow compound manufacturer's written instructions.

K. Terminate threaded conduits into threaded hubs or with locknuts on inside and outside of boxes or cabinets. Install bushings on conduits up to 1-1/4-inch trade size and insulated throat metal bushings on 1-1/2-inch trade size and larger conduits terminated with locknuts. Install insulated throat metal grounding bushings on service conduits.

L. Install raceways square to the enclosure and terminate at enclosures with locknuts. Install locknuts hand tight plus 1/4 turn more.

M. Do not rely on locknuts to penetrate nonconductive coatings on enclosures. Remove coatings in the locknut area prior to assembling conduit to enclosure to assure a continuous ground path.

N. Cut conduit perpendicular to the length. For conduits 2-inch trade size and larger, use roll cutter or a guide to make cut straight and perpendicular to the length.

O. Install pull wires in empty raceways. Use polypropylene or monofilament plastic line with not less than 200-lb tensile strength. Leave at least 12 inches of slack at each end of pull wire. Cap underground raceways designated as spare above grade alongside raceways in use.

P. Install raceway sealing fittings at accessible locations according to NFPA 70 and fill them with listed sealing compound. For concealed raceways, install each fitting in a flush steel box with a blank cover plate having a finish similar to that of adjacent plates or surfaces. Install raceway sealing fittings according to NFPA 70.

Q. Install devices to seal raceway interiors at accessible locations. Locate seals so no fittings or boxes are between the seal and the following changes of environments. Seal the interior of all raceways at the following points:

1. Where conduits pass from warm to cold locations, such as boundaries of refrigerated spaces.
2. Where an underground service raceway enters a building or structure.
3. Conduit extending from interior to exterior of building.
4. Conduit extending into pressurized duct and equipment.
5. Conduit extending into pressurized zones that are automatically controlled to maintain different pressure set points.
6. Where otherwise required by NFPA 70.

R. Flexible Conduit Connections: Comply with NEMA RV 3. Use a maximum of 36 inches of flexible conduit for recessed and semirecessed luminaires, equipment subject to vibration, noise transmission, or movement; and for transformers and motors.

S. Mount boxes at heights indicated on Drawings. If mounting heights of boxes are not individually indicated, give priority to ADA requirements. Install boxes with height measured to center of box unless otherwise indicated.

T. Recessed Boxes in Masonry Walls: Saw-cut opening for box in center of cell of masonry block, and install box flush with surface of wall. Prepare block surfaces to provide a flat surface for a raintight connection between box and cover plate or supported equipment and box.

U. Horizontally separate boxes mounted on opposite sides of walls so they are not in the same vertical channel.

V. Locate boxes so that cover or plate will not span different building finishes.

W. Support boxes of three gangs or more from more than one side by spanning two framing members or mounting on brackets specifically designed for the purpose.

X. Fasten junction and pull boxes to or support from building structure. Do not support boxes by conduits.

Y. Set metal floor boxes level and flush with finished floor surface.

3.3 PROTECTION

A. Protect coatings, finishes, and cabinets from damage and deterioration.

1. Repair damage to galvanized finishes with zinc-rich paint recommended by manufacturer.
2. Repair damage to PVC coatings or paint finishes with matching touchup coating recommended by manufacturer.

SECTION 26-05-43 - UNDERGROUND RACEWAYS AND BOXES

PART 1 - GENERAL

1.1 SUMMARY

A. Section Includes:

1. Nonmetallic conduits and fittings.
2. Polymer concrete handholes and boxes with polymer concrete cover.

PART 2 - PRODUCTS

2.1 NONMETALLIC CONDUITS AND FITTINGS

A. Nonmetallic Conduit:

1. RNC: Type EPC-40-PVC, complying with NEMA TC 2 and UL 651 unless otherwise indicated.

B. Nonmetallic Fittings:

1. Fittings RNC: Comply with NEMA TC 3; match to conduit or tubing type and material.
2. Solvents and Adhesives: As recommended by conduit manufacturer.

2.2 POLYMER CONCRETE HANDHOLES AND BOXES WITH POLYMER CONCRETE COVER

A. Description: Molded of sand and aggregate, bound together with a polymer resin, and reinforced with steel or fiberglass or a combination of the two.

B. Standard: Comply with SCTE 77. Comply with tier requirements in "Underground Enclosure Application" Article.

C. Color: Gray.

D. Configuration: Units shall be designed for flush burial and have open bottom unless otherwise indicated.

E. Cover: Weatherproof, secured by tamper-resistant locking devices and having structural load rating consistent with enclosure.

F. Cover Finish: Nonskid finish shall have a minimum coefficient of friction of 0.50.

G. Cover Legend: Molded lettering, as indicated for each service.

H. Handholes 12 inches wide by 24 inches long and larger shall have factory-installed inserts for cable racks and pulling-in irons.

PART 3 - EXECUTION

3.1 PREPARATION

A. Coordinate layout and installation of underground conduits, handholes, and boxes with final arrangement of other utilities, site grading, and surface features as determined in the field. Notify Architect if there is a conflict between areas of excavation and existing structures or archaeological sites to remain.

3.2 RACEWAY APPLICATION

A. RNC unless otherwise indicated.

B. Stub-ups: GRC.

C. Minimum Raceway Size: 1-inch trade size.

3.3 UNDERGROUND ENCLOSURE APPLICATION

A. Handholes and Boxes for 600 V and Less:

1. Units in Driveway, Parking Lot, and Off-Roadway Locations, Subject to Occasional, Nondeliberate Loading by Heavy Vehicles: Polymer concrete, SCTE 77, Tier 15 structural load rating.
2. Units in Sidewalk and Similar Applications with a Safety Factor for Nondeliberate Loading by Vehicles: Polymer concrete units, SCTE 77, Tier 8 structural load rating.
3. Cover design load shall not exceed the design load of the handhole or box.

3.4 UNDERGROUND RACEWAY INSTALLATION

A. Where indicated on Drawings, install conduits, spacers, and accessories as shown.

B. Joints: Use solvent-cemented joints in duct and fittings and make watertight according to manufacturer's written instructions. Stagger couplings so those of adjacent duct do not lie in same plane.

C. Sealing: Provide temporary closure at terminations of duct with pulled cables. Seal spare duct at terminations. Use sealing compound and plugs to withstand at least 15-psig hydrostatic pressure.

D. Pulling Cord: Install 200-lbf-test nylon cord in empty ducts.

E. Raceways Embedded in Slabs:

1. Run conduit larger than 1-inch trade size, parallel or at right angles to main reinforcement. Where at right angles to reinforcement, place conduit close to slab support. Secure raceways to reinforcement at maximum 10-foot intervals.
2. Arrange raceways to cross building expansion joints at right angles with expansion fittings.
3. Arrange raceways to keep a minimum of 2 inches of concrete cover in all directions.
4. Do not embed threadless fittings in concrete unless specifically approved by Architect for each specific location.
5. Change from RNC to GRC before rising above floor.

3.5 INSTALLATION OF UNDERGROUND HANDHOLES AND BOXES

A. As shown on drawings.

3.6 CLEANING

A. Clean and lubricant underground raceways.

SECTION 26-05-44 - SLEEVES AND SLEEVE SEALS

PART 1 - GENERAL

1.1 SUMMARY

A. Section Includes:

1. Sleeves for raceway and cable penetration of non-fire-rated construction walls and floors.
2. Sleeve-seal systems.
3. Sleeve-seal fittings.
4. Grout.
5. Silicone sealants.

PART 2 - PRODUCTS

2.1 SLEEVES

A. Wall Sleeves:

1. Cast-Iron Pipe Sleeves: Cast or fabricated "wall pipe," equivalent to ductile-iron pressure pipe, with plain ends and integral waterstop unless otherwise indicated.

B. Sleeves for Conduits Penetrating Non-Fire-Rated Gypsum Board Assemblies: Galvanized-steel sheet; 0.0239-inch minimum thickness; round tube closed with welded longitudinal joint, with tabs for screw-fastening the sleeve to the board.

C. Sleeves for Rectangular Openings:

1. Material: Galvanized sheet steel.
2. Minimum Metal Thickness:
   a. For sleeve cross-section rectangle perimeter less than 50 inches and with no side larger than 16 inches, thickness shall be 0.052 inch.
   b. For sleeve cross-section rectangle perimeter 50 inches or more and one or more sides larger than 16 inches, thickness shall be 0.138 inch.

2.2 SLEEVE-SEAL SYSTEMS

A. Description: Modular sealing device, designed for field assembly, to fill annular space between sleeve and raceway or cable.

1. Sealing Elements: EPDM rubber interlocking links shaped to fit surface of pipe. Include type and number required for pipe material and size of pipe.
2. Pressure Plates: Stainless steel.
3. Connecting Bolts and Nuts: Stainless steel of length required to secure pressure plates to sealing elements.

2.3 SLEEVE-SEAL FITTINGS

A. Description: Manufactured plastic, sleeve-type, waterstop assembly made for embedding in concrete slab or wall. Unit shall have plastic or rubber waterstop collar with center opening to match piping OD.

2.4 GROUT

A. Description: Nonshrink; recommended for interior and exterior sealing openings in non-fire-rated walls or floors.

B. Standard: ASTM C 1107/C 1107M, Grade B, post-hardening and volume-adjusting, dry, hydraulic-cement grout.

C. Design Mix: 5000-psi, 28-day compressive strength.

D. Packaging: Premixed and factory packaged.

2.5 SILICONE SEALANTS

A. Silicone Sealants: Single-component, silicone-based, neutral-curing elastomeric sealants of grade indicated below.

1. Grade: Pourable (self-leveling) formulation for openings in floors and other horizontal surfaces that are not fire rated.

B. Silicone Foams: Multicomponent, silicone-based liquid elastomers that, when mixed, expand and cure in place to produce a flexible, nonshrinking foam.

PART 3 - EXECUTION

3.1 SLEEVE INSTALLATION FOR NON-FIRE-RATED ELECTRICAL PENETRATIONS

A. Sleeves for Conduits Penetrating Above-Grade Non-Fire-Rated Concrete and Masonry-Unit Floors and Walls:

1. Interior Penetrations of Non-Fire-Rated Walls and Floors:
   a. Seal annular space between sleeve and raceway or cable, using joint sealant appropriate for size, depth, and location of joint.
   b. Seal space outside of sleeves with mortar or grout. Pack sealing material solidly between sleeve and wall so no voids remain. Tool exposed surfaces smooth; protect material while curing.
2. Use pipe sleeves unless penetration arrangement requires rectangular sleeved opening.
3. Size pipe sleeves to provide 1/4-inch annular clear space between sleeve and raceway or cable unless sleeve seal is to be installed.
4. Install sleeves for wall penetrations unless core-drilled holes or formed openings are used. Install sleeves during erection of walls. Cut sleeves to length for mounting flush with both surfaces of walls. Deburr after cutting.
5. Install sleeves for floor penetrations. Extend sleeves installed in floors 2 inches above finished floor level. Install sleeves during erection of floors.

B. Sleeves for Conduits Penetrating Non-Fire-Rated Gypsum Board Assemblies:

1. Use circular metal sleeves unless penetration arrangement requires rectangular sleeved opening.
2. Seal space outside of sleeves with approved joint compound for gypsum board assemblies.

C. Roof-Penetration Sleeves: Seal penetration of individual raceways and cables with flexible boot-type flashing units applied in coordination with roofing work.

D. Aboveground, Exterior-Wall Penetrations: Seal penetrations using steel pipe sleeves and mechanical sleeve seals. Select sleeve size to allow for 1-inch annular clear space between pipe and sleeve for installing mechanical sleeve seals.

E. Underground, Exterior-Wall and Floor Penetrations: Install Sleeve-Seal System and Fitting.

3.2 SLEEVE-SEAL-SYSTEM INSTALLATION

A. Install sleeve-seal systems in sleeves in exterior concrete walls and slabs-on-grade at raceway entries into building.

B. Install type and number of sealing elements recommended by manufacturer for raceway or cable material and size. Position raceway or cable in center of sleeve. Assemble mechanical sleeve seals and install in annular space between raceway or cable and sleeve. Tighten bolts against pressure plates that cause sealing elements to expand and make watertight seal.

3.3 SLEEVE-SEAL-FITTING INSTALLATION

A. Install sleeve-seal fittings in new walls and slabs as they are constructed.

B. Assemble fitting components of length to be flush with both surfaces of concrete slabs and walls. Position waterstop flange to be centered in concrete slab or wall.

C. Secure nailing flanges to concrete forms.

D. Using grout, seal the space around outside of sleeve-seal fittings.

SECTION 26-05-53 - IDENTIFICATION FOR ELECTRICAL SYSTEMS

PART 1 - GENERAL

1.1 SUMMARY

A. Section Includes:

1. Color and legend requirements for raceways, conductors, and warning labels and signs.
2. Labels.
3. Tapes and stencils.
4. Signs.
5. Paint for identification.

PART 2 - PRODUCTS

2.1 PERFORMANCE REQUIREMENTS

A. Comply with ASME A13.1 and IEEE C2.

B. Comply with 29 CFR 1910.144 and 29 CFR 1910.145.

C. Comply with ANSI Z535.4 for safety signs and labels.

D. Comply with NFPA 70E requirements for arc-flash warning labels.

E. Adhesive-attached labeling materials, including label stocks, laminating adhesives, and inks used by label printers, shall comply with UL 969.

F. Thermal Movements: Allow for thermal movements from ambient and surface temperature changes.

1. Temperature Change: 120 deg F, ambient; 180 deg F, material surfaces.

2.2 COLOR AND LEGEND REQUIREMENTS

A. Raceways and Cables Carrying Circuits at 600 V or Less:

1. Black letters on an orange field.
2. Legend: Indicate voltage.

B. Color-Coding for Phase- and Voltage-Level Identification, 600 V or Less: Use colors listed below for ungrounded service, feeder, and branch-circuit conductors.

1. Color shall be factory applied or field applied for sizes larger than No. 8 AWG if authorities having jurisdiction permit.
2. Colors for 208/120-V Circuits:
   a. Phase A: Black.
   b. Phase B: Red.
   c. Phase C: Blue.
   d. Neutral: White with phase tracer.
3. Color for Equipment Grounds: Green.

2.3 LABELS

A. Self-Adhesive Wraparound Labels: Preprinted, 3-mil-thick, vinyl flexible label with acrylic pressure-sensitive adhesive.

1. Self-Lamination: Clear; UV-, weather- and chemical-resistant; self-laminating, protective shield over the legend. Labels sized such that the clear shield overlaps the entire printed legend.
2. Marker for Labels: Machine-printed, permanent, waterproof, black ink recommended by printer manufacturer.

B. Self-Adhesive Labels: Polyester, thermal, transfer-printed, 3-mil-thick, multicolor, weather- and UV-resistant, pressure-sensitive adhesive labels, configured for intended use and location.

1. Minimum Nominal Size:
   a. 1-1/2 by 6 inches for raceway and conductors.
   b. 3-1/2 by 5 inches for equipment.

2.4 TAPES AND STENCILS

A. Self-Adhesive Vinyl Tape: Colored, heavy duty, waterproof, fade resistant; not less than 3 mils thick by 1 to 2 inches wide; compounded for outdoor use.

B. Tape and Stencil: 4-inch-wide black stripes on 10-inch centers placed diagonally over yellow background and are 12 inches wide. Stop stripes at legends.

ISSUE DATE: 10/18/2024
REVISIONS:

No.:	DATE:	BY:	DESCRIPTION:

DESIGNED: JEF
DRAWN: JEF
CHECKED: KJS

THIS DRAWING IS BEING MADE AVAILABLE BY SCHEMMER FOR USE ON THIS PROJECT IN ACCORDANCE WITH SCHEMMER'S AGREEMENT FOR PROFESSIONAL SERVICES. SCHEMMER ASSUMES NO RESPONSIBILITY OR LIABILITY FOR ANY USE OF THIS DRAWING OR ANY PART THEREOF EXCEPT IN ACCORDANCE WITH THE TERMS OF THE ABOVE AGREEMENT.

JONATHAN EDWARD FANT
E-15743

10/18/2024

SCHEMMER
Design with Purpose. Build with Confidence.
1044 North 115th Street, Suite 300, Omaha, Nebraska 68154 | 402.493.4800
CA0666

LANOHA DEVELOPMENT
HAWTHORNE COURT MULTI-TENANT BUILDING
17662 WELCH PLAZA
OMAHA, NE 68154

ELECTRICAL SPECIFICATIONS

PROJECT NO.: 010347.001

E 01

C:\Users\jfant\Documents\Revit_temp\010347001-ELEC_R23_jfantMFJD1.rvt
10/18/2024 2:38:01 PM

C. Underground-Line Warning Tape:
1. Tape:
a. Recommended by manufacturer for the method of installation and suitable to identify and locate underground electrical and communications utility lines.
b. Printing on tape shall be permanent and shall not be damaged by burial operations.
c. Tape material and ink shall be chemically inert and not subject to degradation when exposed to acids, alkalis, and other destructive substances commonly found in soils.
2. Color and Printing:
a. Comply with ANSI Z535.1, ANSI Z535.2, ANSI Z535.3, ANSI Z535.4, and ANSI Z535.5.
b. Inscriptions for Red-Colored Tapes: Per project.
c. Inscriptions for Orange-Colored Tapes: Per project.

2.5 SIGNS
A. Baked-Enamel Signs:
1. Preprinted aluminum signs, punched or drilled for fasteners, with colors, legend, and size required for application.
2. 1/4-inch grommets in corners for mounting.
3. Nominal Size: 7 by 10 inches.
B. Laminated Acrylic or Melamine Plastic Signs:
1. Engraved legend.
2. Thickness:
a. For signs up to 20 sq. in., minimum 1/16 inch thick.
b. For signs larger than 20 sq. in., 1/8 inch thick.
c. Engraved legend with black letters on white face.
d. Punched or drilled for mechanical fasteners with 1/4-inch grommets in corners for mounting.
e. Framed with mitered acrylic molding and arranged for attachment at applicable equipment.

2.6 MISCELLANEOUS IDENTIFICATION PRODUCTS
A. Paint: Comply with requirements in painting Sections for paint materials and application requirements. Retain paint system applicable for surface material and location (exterior or interior).
B. Fasteners for Labels and Signs: Self-tapping, stainless-steel screws or stainless-steel machine screws with nuts and flat and lock washers.

PART 3 - EXECUTION

3.1 PREPARATION
A. Self-Adhesive Identification Products: Before applying electrical identification products, clean substrates of substances that could impair bond, using materials and methods recommended by manufacturer of identification product.

3.2 INSTALLATION
A. Verify and coordinate identification names, abbreviations, colors, and other features with requirements in other Sections requiring identification applications, Drawings, Shop Drawings, manufacturer's wiring diagrams, and operation and maintenance manual. Use consistent designations throughout Project.
B. Install identifying devices before installing acoustical ceilings and similar concealment.
C. Verify identity of each item before installing identification products.
D. Apply identification devices to surfaces that require finish after completing finish work.
E. Install signs with approved legend to facilitate proper identification, operation, and maintenance of electrical systems and connected items.
F. System Identification for Raceways and Cables under 600 V: Identification shall completely encircle cable or conduit.
1. Secure tight to surface of conductor, cable, or raceway.
G. Auxiliary Electrical Systems Conductor Identification: Identify field-installed alarm, control, and signal connections.
H. Elevated Components: Increase sizes of labels, signs, and letters to those appropriate for viewing from the floor.
I. Self-Adhesive Wraparound Labels: Secure tight to surface at a location with high visibility and accessibility.
J. Self-Adhesive Labels:
1. On each item, install unique designation label that is consistent with wiring diagrams, schedules, and operation and maintenance manual.
2. Unless otherwise indicated, provide a single line of text with 1/2-inch-high letters on 1-1/2-inch-high label; where two lines of text are required, use labels 2 inches high.
K. Self-Adhesive Vinyl Tape: Secure tight to surface at a location with high visibility and accessibility.
1. Field-Applied, Color-Coding Conductor Tape: Apply in half-lapped turns for a minimum distance of 6 inches where splices or taps are made. Apply last two turns of tape with no tension to prevent possible unwinding.
L. Tape and Stencil: Comply with requirements in painting Sections for surface preparation and paint application.
M. Underground Line Warning Tape: As shown on drawings.
N. Baked-Enamel Signs and Laminated Acrylic Signs:
1. Attach signs that are not self-adhesive type with mechanical fasteners appropriate to the location and substrate.
2. Unless otherwise indicated, provide a single line of text with 1/2-inch-high letters on minimum 1-1/2-inch-high sign; where two lines of text are required, use signs minimum 2 inches high.

3.3 IDENTIFICATION SCHEDULE
A. Install identification materials and devices at locations for most convenient viewing without interference with operation and maintenance of equipment. Install access doors or panels to provide view of identifying devices.
B. Identify conductors, cables, and terminals in enclosures and at junctions, terminals, pull points, and locations of high visibility. Identify by system and circuit designation.
C. Accessible Raceways, 600 V or Less, for Service, Feeder, and Branch Circuits, More Than 30 A and 120 V to Ground: Identify with self-adhesive raceway labels.
1. Locate identification at changes in direction, at penetrations of walls and floors, at 50-foot maximum intervals in straight runs, and at 25-foot maximum intervals in congested areas.
D. Accessible Fittings for Raceways and Cables within Buildings: Identify the covers of each junction and pull box of the following systems with self-adhesive labels containing the wiring system legend and system voltage.
E. Power-Circuit Conductor Identification, 600 V or Less: For conductors in vaults, pull and junction boxes, manholes, and handholes, use self-adhesive wraparound labels or self-adhesive vinyl tape to identify the phase.
1. Locate identification at changes in direction, at penetrations of walls and floors, at 50-foot maximum intervals in straight runs, and at 25-foot maximum intervals in congested areas.
F. Control-Circuit Conductor Identification: For conductors and cables in pull and junction boxes, manholes, and handholes, use self-adhesive wraparound labels with the conductor or cable designation, origin, and destination.
G. Control-Circuit Conductor Termination Identification: For identification at terminations, provide self-adhesive wraparound labels with the conductor designation.
H. Auxiliary Electrical Systems Conductor Identification: Self-adhesive wraparound labels that is uniform and consistent with system used by manufacturer for factory-installed connections.
1. Identify conductors, cables, and terminals in enclosures and at junctions, terminals, and pull points. Identify by system and circuit designation.
I. Locations of Underground Lines: Underground-line warning tape for power, lighting, communication, and control wiring and optical-fiber cable.
J. Workspace Indication: Apply tape and stencil to finished surfaces. Show working clearances in the direction of access to live parts. Workspace shall comply with NFPA 70 and 29 CFR 1926.403 unless otherwise indicated. Do not install at flush-mounted panelboards and similar equipment in finished spaces.
K. Instructional Signs: Self-adhesive labels, including the color code for grounded and ungrounded conductors.
L. Warning Labels for Indoor Cabinets, Boxes, and Enclosures for Power and Lighting: Baked-enamel warning signs.
1. Apply to exterior of door, cover, or other access.
2. For equipment with multiple power or control sources, apply to door or cover of equipment.
M. Arc Flash Warning Labeling: Self-adhesive labels.
N. Operating Instruction Signs: Baked-enamel warning signs.

SECTION 26-09-23 - LIGHTING CONTROL DEVICES

PART 1 - GENERAL

1.1 SUMMARY
A. Section Includes:
1. Ceiling-mounted occupancy and vacancy sensors.
2. Switchbox-mounted occupancy and vacancy sensors.

PART 2 - PRODUCTS

2.1 CEILING-MOUNTED OCCUPANCY AND VACANCY SENSORS
A. Description: As specified on drawings.

2.2 SWITCHBOX-MOUNTED OCCUPANCY AND VACANCY SENSORS
A. Description: As specified on drawings.

PART 3 - EXECUTION

3.1 EXAMINATION
A. Examine lighting control devices before installation. Reject lighting control devices that are wet, moisture damaged, or mold damaged.
B. Examine walls and ceilings for suitable conditions where lighting control devices will be installed.
C. Proceed with installation only after unsatisfactory conditions have been corrected.

3.2 SENSOR INSTALLATION
A. Coordinate layout and installation of ceiling-mounted devices with other construction that penetrates ceilings or is supported by them, including light fixtures, HVAC equipment, smoke detectors, fire-suppression systems, and partition assemblies.

3.3 WIRING INSTALLATION
A. Wiring Method: Comply with Section 260519 "Low-Voltage Electrical Power and Control Conductors and Cables." Minimum conduit size is 1/2 inch.
B. Wiring within Enclosures: Comply with NECA 1. Separate power-limited and nonpower-limited conductors according to conductor manufacturer's written instructions.
C. Size conductors according to lighting control device manufacturer's written instructions unless otherwise indicated.
D. Splices, Taps, and Terminations: Make connections only on numbered terminal strips in junction, pull, and outlet boxes; terminal cabinets; and equipment enclosures.

3.4 IDENTIFICATION
A. Identify components and power and control wiring.
1. Identify circuits or luminaires controlled by photoelectric and occupancy sensors at each sensor.

SECTION 26-24-16 - PANELBOARDS

PART 1 - GENERAL

1.1 SUMMARY
A. Section Includes:
1. Distribution panelboards (Power Panels).
2. Lighting and appliance branch-circuit panelboards (Branch Panels).

PART 2 - PRODUCTS

2.1 PANELBOARDS COMMON REQUIREMENTS
A. Comply with NEMA PB 1.
B. Power Panels: NEMA PB 1, distribution type.
C. Branch Panels: NEMA PB 1, lighting and appliance branch-circuit type.
D. Enclosures: Flush and Surface-mounted, dead-front cabinets.
1. Height: 84 inches maximum.
2. Width: Match existing.
3. Front: Secured to box with concealed trim clamps. For surface-mounted fronts, match box dimensions; for flush-mounted fronts, overlap box. Trims shall cover all live parts and shall have no exposed hardware.
4. Doors: Secured with vault-type latch with tumbler lock; keyed alike.
5. Finishes:
a. Panels and Trim: Steel, factory finished immediately after cleaning and pretreating with manufacturer's standard two-coat, baked-on finish consisting of prime coat and thermosetting topcoat.
b. Back Boxes: Galvanized steel.
E. Mains: Circuit breaker or Lugs only.
F. Incoming Mains:
1. Main Breaker: Main lug interiors up to 400 amperes shall be field convertible to main breaker.
G. Branch Overcurrent Protective Devices:
1. Power Panels: Plug-in circuit breakers where individual positive-locking device requires mechanical release for removal.
2. Branch Panels: Bolt-on circuit breakers, replaceable without disturbing adjacent units.
H. Phase, Neutral, and Ground Buses:
1. Material: Tin-plated aluminum.
a. Plating shall run entire length of bus.
b. Bus shall be fully rated the entire length.
2. Interiors shall be factory assembled into a unit. Replacing switching and protective devices shall not disturb adjacent units or require removing the main bus connectors.
3. Equipment Ground Bus: Adequate for feeder and branch-circuit equipment grounding conductors; bonded to box.
4. Full-Sized Neutral: Equipped with full-capacity bonding strap for service entrance applications. Mount electrically isolated from enclosure. Do not mount neutral bus in gutter.
I. Conductor Connectors: Suitable for use with conductor material and sizes.
1. Material: Tin-plated aluminum or Hard-drawn copper, 98 percent conductivity.
2. Terminations shall allow use of 75 deg C rated conductors without derating.
3. Size: Lugs suitable for indicated conductor sizes, with additional gutter space, if required, for larger conductors.
4. Main and Neutral Lugs: Mechanical type, with a lug on the neutral bar for each pole in the panelboard.
5. Ground Lugs and Bus-Configured Terminators: Mechanical type, with a lug on the bar for each pole in the panelboard.
6. Feed-Through Lugs: Mechanical type, suitable for use with conductor material. Locate at opposite end of bus from incoming lugs or main device.
7. Subfeed (Double) Lugs: Mechanical type suitable for use with conductor material. Locate at same end of bus as incoming lugs or main device.
J. Service Equipment: Panelboards or load centers shall be labeled by an NRTL acceptable to authority having jurisdiction for use as service equipment with one or more main service disconnecting and overcurrent protective devices.
K. Panelboard Short-Circuit Current Rating: Fully rated to interrupt symmetrical short-circuit current available at terminals. Assembly listed by an NRTL for 100 percent interrupting capacity.
1. Panelboards and overcurrent protective devices rated 240 V or less shall have short-circuit ratings as shown on Drawings, but not less than 10,000 A rms symmetrical.
2. Panelboards and overcurrent protective devices rated above 240 V and less than 600 V shall have short-circuit ratings as shown on Drawings, but not less than 14,000 A rms symmetrical.

2.2 DISCONNECTING AND OVERCURRENT PROTECTIVE DEVICES
A. MCCB: Comply with UL 489, with interrupting capacity to meet available fault currents.
1. Thermal-Magnetic Circuit Breakers:
a. Inverse time-current element for low-level overloads.
b. Instantaneous magnetic trip element for short circuits.
c. Adjustable magnetic trip setting for circuit-breaker frame sizes 250 A and larger.
2. Electronic Trip Circuit Breakers:
a. RMS sensing.
b. Field-replaceable rating plug or electronic trip.
c. Digital display of settings, trip targets, and indicated metering displays.
d. Multi-button keypad to access programmable functions and monitored data.
e. Ten-event, trip-history log. Each trip event shall be recorded with type, phase, and magnitude of fault that caused the trip.
f. Integral test jack for connection to portable test set or laptop computer.
g. Field-Adjustable Settings: As shown on drawings.
3. GFCI Circuit Breakers: Single- and double-pole configurations with Class A ground-fault protection (6-mA trip).
4. GFEP Circuit Breakers: Class B ground-fault protection (30-mA trip).
5. Arc-Fault Circuit Interrupter Circuit Breakers: Comply with UL 1699; 120/240-V, single-pole configuration.
6. Subfeed Circuit Breakers: Vertically mounted.
7. MCCB Features and Accessories:
a. Standard frame sizes, trip ratings, and number of poles.
b. Breaker handle indicates tripped status.
c. UL listed for reverse connection without restrictive line or load ratings.
d. Lugs: Mechanical style, suitable for number, size, trip ratings, and conductor materials.
e. Ground-Fault Protection: Integrally mounted relay and trip unit with adjustable pickup and time-delay settings, push-to-test feature, and ground-fault indicator.
f. Rating Plugs: Three-pole breakers with ampere ratings greater than 150 amperes shall have interchangeable rating plugs or electronic adjustable trip units.
g. Multipole units enclosed in a single housing with a single handle.
h. Handle Padlocking Device: Fixed attachment, for locking circuit-breaker handle in on or off position.

2.3 IDENTIFICATION
A. Panelboard Label: Manufacturer's name and trademark, voltage, amperage, number of phases, and number of poles shall be located on the interior of the panelboard door.
B. Breaker Labels: Faceplate shall list current rating, UL and IEC certification standards, and AIC rating.
C. Circuit Directory: Computer-generated circuit directory mounted inside panelboard door with transparent plastic protective cover.
1. Circuit directory shall identify specific purpose with detail sufficient to distinguish it from all other circuits.

PART 3 - EXECUTION

3.1 EXAMINATION
A. Verify actual conditions with field measurements prior to ordering panelboards to verify that equipment fits in allocated space in, and comply with, minimum required clearances specified in NFPA 70.
B. Receive, inspect, handle, and store panelboards according to NEMA PB 1.1.
C. Examine panelboards before installation. Reject panelboards that are damaged, rusted, or have been subjected to water saturation.
D. Examine elements and surfaces to receive panelboards for compliance with installation tolerances and other conditions affecting performance of the Work.
E. Proceed with installation only after unsatisfactory conditions have been corrected.

3.2 INSTALLATION
A. Coordinate layout and installation of panelboards and components with other construction that penetrates walls or is supported by them, including electrical and other types of equipment, raceways, piping, encumbrances to workspace clearance requirements, and adjacent surfaces. Maintain required workspace clearances and required clearances for equipment access doors and panels.
B. Install panelboards and accessories according to NEMA PB 1.1.
C. Equipment Mounting:
1. Attach panelboard to the vertical finished or structural surface behind the panelboard.
D. Temporary Lifting Provisions: Remove temporary lifting eyes, channels, and brackets and temporary blocking of moving parts from panelboards.
E. Mount top of trim 90 inches above finished floor unless otherwise indicated.
F. Mount panelboard cabinet plumb and rigid without distortion of box.
G. Mount recessed panelboards with fronts uniformly flush with wall finish and mating with back box.
H. Mount surface-mounted panelboards to steel slotted supports. Orient steel slotted supports vertically.
I. Install overcurrent protective devices and controllers not already factory installed.
1. Set field-adjustable, circuit-breaker trip ranges.
2. Tighten bolted connections and circuit breaker connections using calibrated torque wrench or torque screwdriver per manufacturer's written instructions.
J. Make grounding connections and bond neutral for services and separately derived systems to ground. Make connections to grounding electrodes, separate grounds for isolated ground bars, and connections to separate ground bars.
K. Install filler plates in unused spaces.
L. Stub four 1-inch empty conduits from panelboard into accessible ceiling space or space designated to be ceiling space in the future. Stub four 1-inch empty conduits into raised floor space or below slab not on grade.

3.3 ADJUSTING
A. Adjust moving parts and operable components to function smoothly, and lubricate as recommended by manufacturer.
B. Set field-adjustable circuit-breaker trip ranges as indicated.

SECTION 26-27-26 - WIRING DEVICES

PART 1 - GENERAL

1.1 SUMMARY
A. Section Includes:
1. Standard-grade receptacles, 125 V, 20 A.
2. GFCI receptacles, 125 V, 20 A.
3. Toggle switches, 120/277 V, 20 A.
4. Wall-box dimmers.
5. Wall plates.

PART 2 - PRODUCTS

2.1 GENERAL WIRING-DEVICE REQUIREMENTS
A. Comply with NEMA WD 1.
B. Device Color:
1. Wiring Devices Connected to Normal Power System: As selected by Architect unless otherwise indicated or required by NFPA 70 or device listing.
2. Wiring Devices Connected to Essential Electrical System: Red.
C. Wall Plate Color: For plastic covers, match device color.

2.2 STANDARD-GRADE RECEPTACLES, 125 V, 20 A
A. Tamper-Resistant Duplex Receptacles, 125 V, 20 A:
1. Description: Two pole, three wire, and self-grounding. Integral shutters that operate only when a plug is inserted in the receptacle.
2. Configuration: NEMA WD 6, Configuration 5-20R.
3. Standards: Comply with UL 498 and FS W-C-596.
4. Marking: Listed and labeled as complying with NFPA 70, "Tamper-Resistant Receptacles" Article.

2.3 GFCI RECEPTACLES, 125 V, 20 A
A. Tamper-Resistant Duplex GFCI Receptacles, 125 V, 20 A:
1. Description: Integral GFCI with "Test" and "Reset" buttons and LED indicator light. Two pole, three wire, and self-grounding. Integral shutters that operate only when a plug is inserted in the receptacle.
2. Configuration: NEMA WD 6, Configuration 5-20R.
3. Type: Non-feed through.
4. Standards: Comply with UL 498, UL 943 Class A, and FS W-C-596.
5. Marking: Listed and labeled as complying with NFPA 70, "Tamper-Resistant Receptacles" Article.
B. Tamper- and Weather-Resistant, GFCI Duplex Receptacles, 125 V, 20 A:
1. Description: Integral GFCI with "Test" and "Reset" buttons and LED indicator light. Two pole, three wire, and self-grounding. Integral shutters that operate only when a plug is inserted in the receptacle. Square face.
2. Configuration: NEMA WD 6, Configuration 5-20R.
3. Type: Non-feed through.
4. Standards: Comply with UL 498 and UL 943 Class A.
5. Marking: Listed and labeled as complying with NFPA 70, "Tamper-Resistant Receptacles" and "Receptacles in Damp or Wet Locations" articles.

2.4 TOGGLE SWITCHES, 120/277 V, 20 A
A. Standards: Comply with UL 20 and FS W-S-896.

2.5 WALL-BOX DIMMERS
A. Description: As specified on drawings.

2.6 WALL PLATES
A. Single Source: Obtain wall plates from same manufacturer of wiring devices.
B. Single and combination types shall match corresponding wiring devices.
1. Plate-Securing Screws: Metal with head color to match plate finish.
2. Material for Finished Spaces: Smooth, high-impact Nylon or 0.035-inch-thick, satin-finished, Type 302 stainless steel.
3. Material for Unfinished Spaces: Galvanized steel.
4. Material for Damp Locations: Cast aluminum with spring-loaded lift cover, and listed and labeled for use in wet and damp locations.
C. Wet-Location, Weatherproof Cover Plates: NEMA 250, complying with Type 3R, weather-resistant, die-cast aluminum with lockable cover.

PART 3 - EXECUTION

3.1 INSTALLATION
A. Comply with NECA 1, including mounting heights listed in that standard, unless otherwise indicated.
B. Coordination with Other Trades:
1. Protect installed devices and their boxes. Do not place wall finish materials over device boxes, and do not cut holes for boxes with routers that are guided by riding against outside of boxes.
2. Keep outlet boxes free of plaster, drywall joint compound, mortar, cement, concrete, dust, paint, and other material that may contaminate the raceway system, conductors, and cables.
3. Install device boxes in brick or block walls so that the cover plate does not cross a joint unless the joint is troweled flush with the face of the wall.
4. Install wiring devices after all wall preparation, including painting, is complete.
C. Conductors:
1. Do not strip insulation from conductors until right before they are spliced or terminated on devices.
2. Strip insulation evenly around the conductor using tools designed for the purpose. Avoid scoring or nicking of solid wire or cutting strands from stranded wire.
3. The length of free conductors at outlets for devices shall comply with NFPA 70, Article 300, without pigtails.
4. Existing Conductors:
a. Cut back and pigtail, or replace all damaged conductors.
b. Straighten conductors that remain and remove corrosion and foreign matter.
c. Pigtailing existing conductors is permitted, provided the outlet box is large enough.
D. Device Installation:
1. Replace devices that have been in temporary use during construction and that were installed before building finishing operations were complete.
2. Keep each wiring device in its package or otherwise protected until it is time to connect conductors.
3. Do not remove surface protection, such as plastic film and smudge covers, until the last possible moment.
4. Connect devices to branch circuits using pigtails that are not less than 6 inches in length.
5. When there is a choice, use side wiring with binding-head screw terminals. Wrap solid conductor tightly clockwise, two-thirds to three-fourths of the way around terminal screw.
6. Use a torque screwdriver when a torque is recommended or required by manufacturer.
7. When conductors larger than No. 12 AWG are installed on 15- or 20-A circuits, splice No. 12 AWG pigtails for device connections.
8. Tighten unused terminal screws on the device.
9. When mounting into metal boxes, remove the fiber or plastic washers used to hold device-mounting screws in yokes, allowing metal-to-metal contact.
E. Receptacle Orientation:
1. Install ground pin of vertically mounted receptacles up, and on horizontally mounted receptacles to the left.
F. Device Plates: Do not use oversized or extra-deep plates. Repair wall finishes and remount outlet boxes when standard device plates do not fit flush or do not cover rough wall opening.
G. Dimmers:
1. Install dimmers within terms of their listing.
2. Verify that dimmers used for fan-speed control are listed for that application.
3. Install unshared neutral conductors on line and load side of dimmers according to manufacturers' device, listing conditions in the written instructions.
H. Arrangement of Devices: Unless otherwise indicated, mount flush, with long dimension vertical and with grounding terminal of receptacles on top. Group adjacent switches under single, multigang wall plates.
I. Adjust locations of floor service outlets and service poles to suit arrangement of partitions and furnishings.

3.2 IDENTIFICATION
A. Identify each receptacle with panelboard identification and circuit number. Use machine printed, self-adhesive labels on face of plate, and durable wire markers or tags inside outlet boxes.

SECTION 26-28-13 - FUSES

PART 1 - GENERAL

1.1 SUMMARY
A. Section Includes:
1. Cartridge fuses rated 600 V ac and less for use in the following:
a. Control circuits.
b. Enclosed controllers.
c. Enclosed switches.

PART 2 - PRODUCTS

2.1 CARTRIDGE FUSES
A. Characteristics: NEMA FU 1, current-limiting, nonrenewable cartridge fuses with voltage ratings consistent with circuit voltages.
1. Type RK-1: 250 or 600-V, zero- to 600-A rating, 200 kAIC, time delay.
2. Type CC: 600-V, zero- to 30-A rating, 200 kAIC, time delay.
3. Type J: 600-V, zero- to 600-A rating, 200 kAIC, time delay.
B. Comply with NEMA FU 1 for cartridge fuses.
C. Coordinate fuse ratings with utilization equipment nameplate limitations of maximum fuse size and with system short-circuit current levels.

PART 3 - EXECUTION

3.1 EXAMINATION
A. Examine fuses before installation. Reject fuses that are moisture damaged or physically damaged.
B. Examine holders to receive fuses for compliance with installation tolerances and other conditions affecting performance, such as rejection features.
C. Examine utilization equipment nameplates and installation instructions. Install fuses of sizes and with characteristics appropriate for each piece of equipment.
D. Evaluate ambient temperatures to determine if fuse rating adjustment factors must be applied to fuse ratings.
E. Proceed with installation only after unsatisfactory conditions have been corrected.

3.2 FUSE APPLICATIONS
A. Cartridge Fuses:
1. Elevator Branch Circuits: Class J.
2. Other Branch Circuits: Class RK1
3. Control Transformer Circuits: Class CC, time delay, control transformer duty.
4. Provide open-fuse indicator fuses or fuse covers with open fuse indication.

3.3 INSTALLATION
A. Install fuses in fusible devices. Arrange fuses so rating information is readable without removing fuse.

SECTION 26-28-16 - ENCLOSED SWITCHES

PART 1 - GENERAL

1.1 SUMMARY
A. Section Includes:
1. Fusible switches.
2. Nonfusible switches.
3. Accessories.
4. Enclosures.

PART 2 - PRODUCTS

2.1 FUSIBLE SWITCHES
A. Type HD, Heavy Duty, Three Pole, Single Throw, 240 or 600-V ac: UL 98 and NEMA KS 1, horsepower rated, lockable handle with capability to accept three padlocks, and interlocked with cover in closed position.

2.2 NONFUSIBLE SWITCHES
A. Type HD, Heavy Duty, Three Pole, Single Throw, 600-V ac: UL 98 and NEMA KS 1, horsepower rated, lockable handle with capability to accept three padlocks, and interlocked with cover in closed position.

2.3 ACCESSORIES:
1. Equipment Ground Kit: Internally mounted and labeled for copper and aluminum ground conductors.
2. Neutral Kit: Internally mounted; insulated, capable of being grounded and bonded; labeled for copper and aluminum neutral conductors.
3. Class R Fuse Kit: Provides rejection of other fuse types when Class R fuses are specified.
4. Auxiliary Contact Kit: One NO/NC (Form "C") auxiliary contact(s), arranged to activate before switch blades open. Contact rating - 120-V ac.
5. Lugs: Mechanical type, suitable for number, size, and conductor material.
6. Service-Rated Switches: Labeled for use as service equipment.

2.4 ENCLOSURES
A. Enclosed Switches and Circuit Breakers: UL 489, NEMA KS 1, NEMA 250, and UL 50, to comply with environmental conditions at installed location.
B. Enclosure Finish: The enclosure shall be finished with gray baked enamel paint, electrodeposited on cleaned, phosphatized steel (NEMA 250 Type 1); gray baked enamel paint, electrodeposited on cleaned, phosphatized galvannealed steel (NEMA 250 Types 3R, 12); a brush finish on Type 304 stainless steel (NEMA 250 Type 4-4X stainless steel); copper-free cast aluminum alloy (NEMA 250 Types 7, 9).
C. Conduit Entry: NEMA 250 Types 4, 4X, and 12 enclosures shall contain no knockouts. NEMA 250 Types 7 and 9 enclosures shall be provided with threaded conduit openings in both endwalls.
D. NEMA 250 Type 7/9 enclosures shall be furnished with a breather and drain kit to allow their use in outdoor and wet location applications.

PART 3 - EXECUTION

3.1 EXAMINATION
A. Examine elements and surfaces to receive enclosed switches and circuit breakers for compliance with installation tolerances and other conditions affecting performance of the Work.
B. Proceed with installation only after unsatisfactory conditions have been corrected.
1. Commencement of work shall indicate Installer's acceptance of the areas and conditions as satisfactory.

3.2 INSTALLATION
A. Coordinate layout and installation of switches and components with equipment served and adjacent surfaces. Maintain required workspace clearances and required clearances for equipment access doors and panels.
B. Install individual wall-mounted switches and circuit breakers with tops at uniform height unless otherwise indicated.
C. Temporary Lifting Provisions: Remove temporary lifting of eyes, channels, and brackets and temporary blocking of moving parts from enclosures and components.
D. Install fuses in fusible devices.

3.3 ADJUSTING
A. Adjust moving parts and operable components to function smoothly,and lubricate as recommended by manufacturer.

SECTION 26-51-19 - LED INTERIOR LIGHTING

PART 1 - GENERAL

1.1 SUMMARY
A. Section includes the following types of LED luminaires:
1. Luminaires.
2. Luminaire supports.

PART 2 - PRODUCTS

2.1 LUMINAIRE REQUIREMENTS
A. As specified in luminaire schedule.
B. Alternate Luminaires: Use of equivalent alternate luminaires must be approved by the Engineer. Approval will be based on appearance, wattage, luminous output, distribution pattern, CCT, type of construction, and materials of construction. Approval of equivalent alternate luminaires requires submittal of manufacturer's datasheets clearly marked to show intended options to be furnished and lighting calculations to enable comparison to Engineer's lighting design. Failure to meet these requirements will result in rejection of alternate luminaires.

2.2 LUMINAIRE SUPPORT
A. Single-Stem Hangers: 1/2-inch steel tubing with swivel ball fittings and ceiling canopy. Finish same as luminaire.
B. Wires: ASTM A 641/A 641 M, Class 3, soft temper, zinc-coated steel, 12 gage.
C. Rod Hangers: 3/16-inch minimum diameter, cadmium-plated, threaded steel rod.
D. Hook Hangers: Integrated assembly matched to luminaire, line voltage, and equipment with threaded attachment, cord, and locking-type plug.

PART 3 - EXECUTION

3.1 EXAMINATION
A. Examine substrates, areas, and conditions, with Installer present, for compliance with requirements for installation tolerances and other conditions affecting performance of the Work.
B. Examine roughing-in for luminaire to verify actual locations of luminaire and electrical connections before luminaire installation.
C. Examine walls, roofs, canopy ceilings, and overhang ceilings for suitable conditions where luminaires will be installed.
D. Proceed with installation only after unsatisfactory conditions have been corrected.

3.2 TEMPORARY LIGHTING
A. If approved by the Architect, use selected permanent luminaires for temporary lighting. When construction is sufficiently complete, clean luminaires used for temporary lighting and install new lamps.

3.3 INSTALLATION
A. Install luminaires level, plumb, and square with ceilings, walls, and finished grade unless otherwise indicated.
B. Install lamps in each luminaire.
C. Coordinate layout and installation of luminaires with other construction.
D. Supports:
1. Sized and rated for luminaire weight.
2. Able to maintain luminaire position after cleaning and relamping.
3. Provide support for luminaire without causing deflection of ceiling or wall.
4. Luminaire-mounting devices shall be capable of supporting a horizontal force of 100 percent of luminaire weight and a vertical force of 400 percent of luminaire weight.
E. Flush-Mounted Luminaires:
1. Secured to outlet box.
2. Attached to ceiling structural members at four points equally spaced around circumference of luminaire.
3. Trim ring flush with finished surface.
F. Wall-Mounted Luminaires:
1. Attached to structural members in walls or attached to a backing plate attached to wall structural members.
a. 20 gauge: interior applications.
b. 10 gauge: exterior applications.
2. Do not attach luminaires directly to gypsum board.
G. Suspended Luminaires:
1. Ceiling Mount:
a. As specified in luminair schedule.
2. Pendant and Rods: Where longer than 48 inches, brace to limit swinging.
3. Stem-Mounted, Single-Unit Luminaires: Suspend with twin-stem hangers. Support with approved outlet box and accessories that hold stem and provide damping of luminaire oscillations. Support outlet box vertically to building structure using approved devices.
4. Continuous Rows of Luminaires: Use tubing or stem for wiring at one point and wire support for suspension for each unit length of luminaire chassis, including one at each end.
5. Do not use ceiling grid as support for pendant luminaires. Connect support wires or rods to building structure.
H. Ceiling-Grid-Mounted Luminaires:
1. Secure to any required outlet box.
2. Secure luminaire to the luminaire opening using approved fasteners in a minimum of four locations, spaced near corners of luminaire.

DESIGNED: JEF
DRAWN: JEF
CHECKED: KJS

REVISIONS:			
No.:	DATE:	BY:	DESCRIPTION:

ISSUE DATE: 10/18/2024

THIS DRAWING IS BEING MADE AVAILABLE BY SCHEMMER ON THIS PROJECT IN ACCORDANCE WITH STATE OF NEBRASKA PROFESSIONAL SERVICES ACTS. SCHEMMER DOES NOT ASSUME RESPONSIBILITY OR LIABILITY FOR ANY USE OF THIS DRAWING OR ANY PART THEREOF EXCEPT IN ACCORDANCE WITH THE TERMS OF THE SCHEMMER AGREEMENT.

STATE OF NEBRASKA
KYLE JOSEPH SCHEMMER
ELECTRICAL ENGINEER
E-15143
10/18/2024

SCHEMMER
Design with Purpose. Build with Confidence.
1044 North 115th Street, Suite 300, Omaha, Nebraska 68154 | 402.493.4800
CA0666

LANOHA DEVELOPMENT
HAWTHORNE COURT MULTI-TENANT BUILDING
17662 WELCH PLAZA
OMAHA, NE 68154

ELECTRICAL SPECIFICATIONS

PROJECT NO.: 010347.001

E 02

C:\Users\jeanf\Documents\Revit_temp\010347001-ELEC_R23_jfeanMEJDT.rvt
10/18/2024 2:38:03 PM

REF. NOTES (x):

1 PROVIDE LIGHTING TIMER WITH PROGRAMMABLE ASTRONOMICAL TIMING FOR EXTERIOR LIGHTING CONTROL.

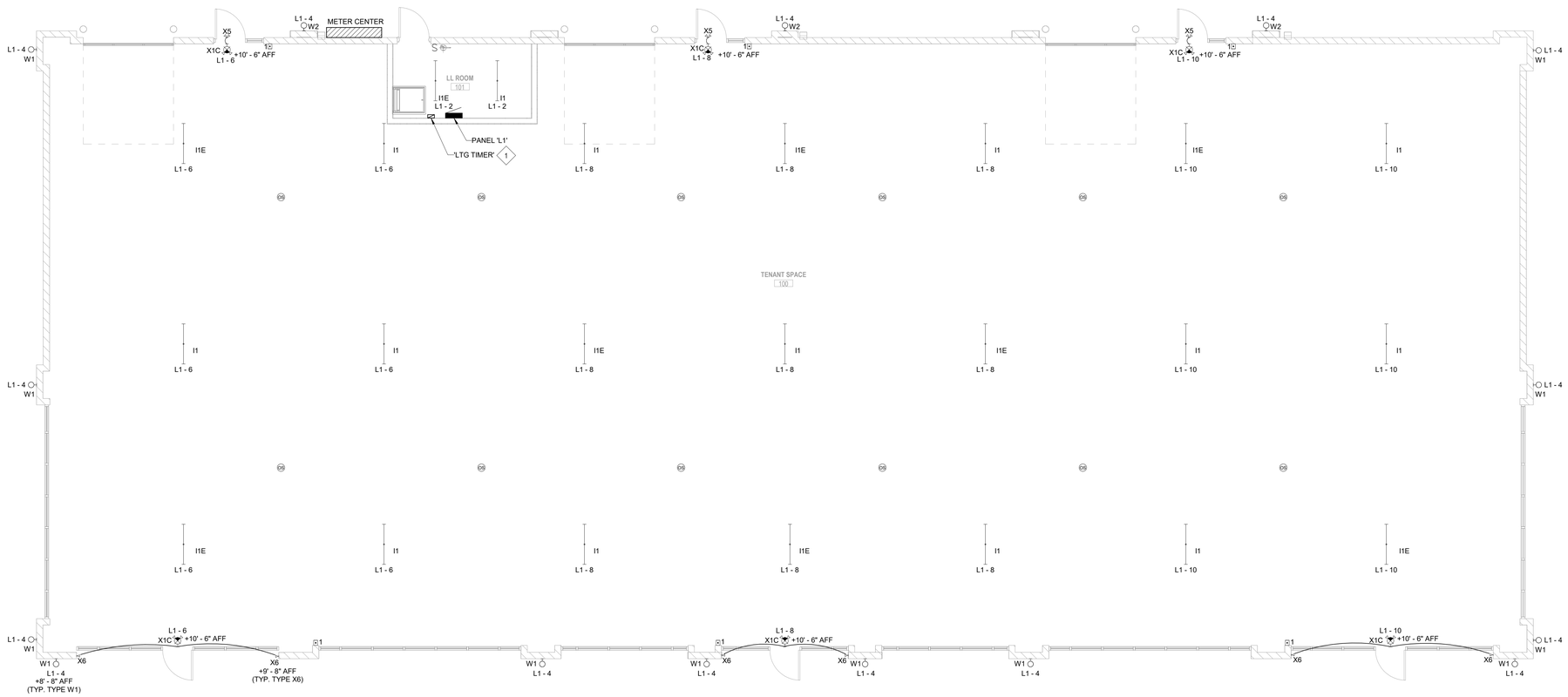

1 FIRST FLOOR PLAN - LIGHTING
SCALE: 3/16" = 1'-0"

NORTH

DESIGNED: JEF
DRAWN: JEF
CHECKED: KJS

ISSUE DATE: 10/18/2024
REVISIONS:

No.:	DATE:	BY:	DESCRIPTION:

PROFESSIONAL ENGINEER
KEVIN J. SCHEMMER
E-15143
STATE OF NEBRASKA
10/18/2024

SCHEMMER
Design with Purpose. Build with Confidence.
1044 North 115th Street, Suite 300, Omaha, Nebraska 68154 | 402.493.4800
CA0666

LANOHA DEVELOPMENT
HAWTHORNE COURT MULTI-TENANT BUILDING
17662 WELCH PLAZA
OMAHA, NE 68154

FLOOR PLAN - LIGHTING

PROJECT NO.: 010347.001

E101

C:\Users\jeff\Documents\Revit_temp\010347001-ELEC_R23_jfjeff8F-DT.rvt
10/18/2024 3:40:41 PM

REF. NOTES (X):

20	METER CENTER TO HAVE THREE (3) 400 AMP METERS FOR FUTURE TENANTS AND ONE (1) 200 AMP METER FOR HOUSE LOADS, PANELBOARD 'L1'.
24	SEE E301 ELECTRICAL SITE PLAN FOR CONTINUANCE.

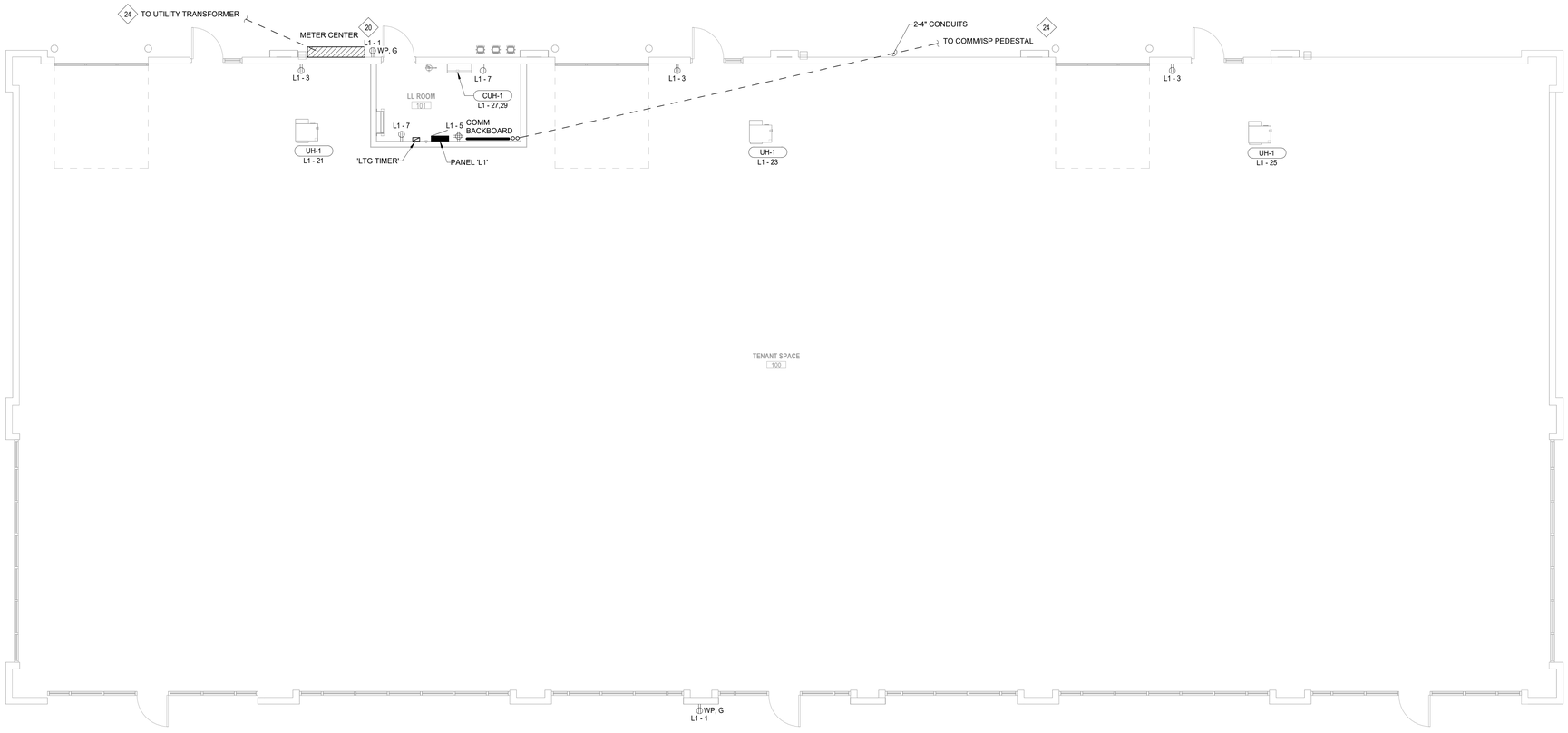

1 FIRST FLOOR PLAN - POWER & AUXILIARY SYSTEMS
SCALE: 3/16" = 1'-0"

NORTH

DESIGNED:	JEF	ISSUE DATE:	10/18/2024
DRAWN:	JEF	REVISIONS:	
CHECKED:	KJS	No.: DATE: BY: DESCRIPTION:	

REGISTERED PROFESSIONAL ENGINEER
KEVIN J. SWANSON
E-15143
STATE OF NEBRASKA
10/18/2024

SCHEMMER
Design with Purpose. Build with Confidence.
1044 North 115th Street, Suite 300, Omaha, Nebraska 68154 | 402.493.4800
CA0666

LANOHA DEVELOPMENT
HAWTHORNE COURT MULTI-TENANT BUILDING
17662 WELCH PLAZA
OMAHA, NE 68154

FLOOR PLAN - POWER & AUXILIARY SYSTEMS

PROJECT NO.: 010347.001

E201

REF. NOTES (X):

22 SEE CIVIL SITE UTILITIES PLAN FOR UTILITY FEEDER TO THE UTILITY TRANSFORMER AND OTHER EXISTING AND NEW UNDERGROUND UTILITIES.

23 SEE E101 FOR BUILDING MOUNTED LUMINAIRES.

1 SITE PLAN - ELECTRICAL
SCALE: 1" = 10'-0"

NORTH

DESIGNED: JEF
DRAWN: JEF
CHECKED: KJS

ISSUE DATE: 10/18/2024
REVISIONS:

No.:	DATE:	BY:	DESCRIPTION:

PROFESSIONAL ELECTRICAL ENGINEER
JEFFREY E. FISHER
E-15143
STATE OF NEBRASKA
10/18/2024

SCHEMMER
Design with Purpose. Build with Confidence.
1044 North 115th Street, Suite 300, Omaha, Nebraska 68154 | 402.493.4800
CA0666

LANOHA DEVELOPMENT
HAWTHORNE COURT MULTI-TENANT BUILDING
17662 WELCH PLAZA
OMAHA, NE 68154

SITE PLAN - ELECTRICAL

PROJECT NO.: 010347.001

E301

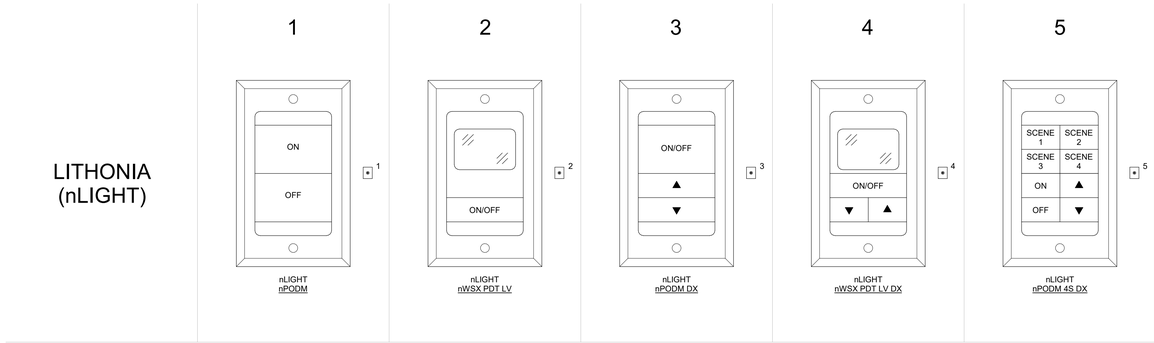

1 LITHONIA (nLIGHT) - SPECIALTY LIGHTING PUSHBUTTONS
SCALE: NOT TO SCALE

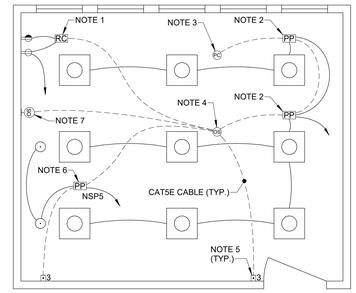

NOTES:
1. POWER PACK (nPP20 PL) SHALL CONTROL "CONTROLLED" RECEPTACLES THROUGH OCCUPANCY SENSOR. (AS REQUIRED. SEE PLANS).
2. POWER PACK (nPP16D) REQUIRED TO CONTROL EACH DIMMABLE REGION / ZONE, INCLUDING DAYLIGHTING ZONES. WHERE DIMMING IS NOT SHOWN / REQUIRED, POWER PACK (nPP16) SHALL BE USED. CONTROLS AND REGIONS / ZONES SHOWN ON PLANS.
3. PHOTOCELL CONTROL DEVICE: nCM ADCX RJB (AS REQUIRED. SEE PLANS).
4. OCCUPANCY SENSOR DEVICE: nCM-PDT-9/10-RJB (AS REQUIRED. SEE PLANS).
5. LOW VOLTAGE LIGHT CONTROL / DIMMER PUSHBUTTON SWITCH. SEE PLANS AND PUSHBUTTON DETAIL FOR MORE INFORMATION.
6. POWER PACKS LABELED "NSP5". nSP5 PCD POWER PACKS FOR LINE-VOLTAGE SWITCHING & DIMMING OF DECORATIVE INCANDESCENT LUMINAIRES. (AS REQUIRED. SEE PLANS).
7. WALL OCCUPANCY SENSOR DEVICE: nWV-PDT-16 (AS REQUIRED. SEE PLANS).

2 LITHONIA (nLIGHT) - SPECIALTY LIGHTING WIRING DIAGRAM
SCALE: NOT TO SCALE

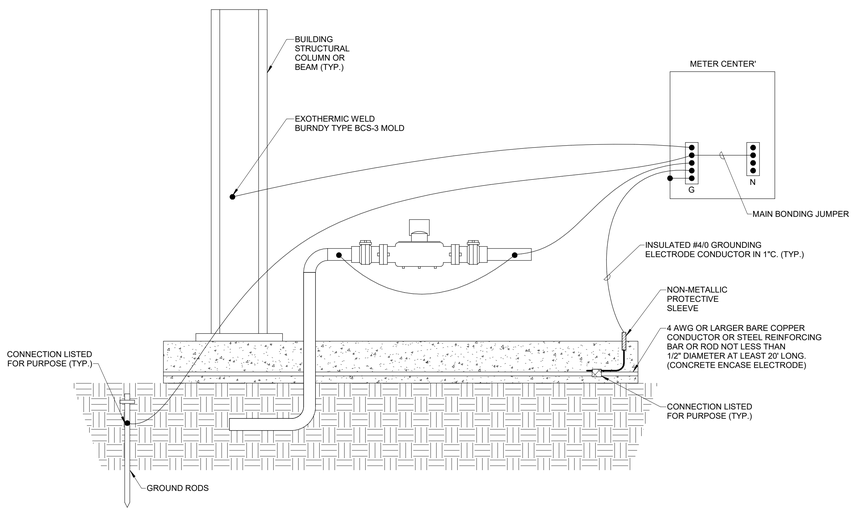

3 SERVICE GROUNDING DETAIL
SCALE: NOT TO SCALE

DESIGNED:	JEF
DRAWN:	JEF
CHECKED:	KJS
ISSUE DATE:	10/18/2024
REVISIONS:	
No.:	
DATE:	
BY:	
DESCRIPTION:	

NEBRASKA ELECTRICAL ENGINEER
KEVIN JAMES SCHWIEN
E-15143
STATE OF NEBRASKA
10/18/2024

SCHEMMER
Design with Purpose. Build with Confidence.
1044 North 115th Street, Suite 300, Omaha, Nebraska 68154 | 402.493.4800
CA0666

LANOHA DEVELOPMENT
HAWTHORNE COURT MULTI-TENANT BUILDING
17662 WELCH PLAZA
OMAHA, NE 68154

ELECTRICAL DETAILS

PROJECT NO.: 010347.001

E401

REF. NOTES (X):

20 METER CENTER TO HAVE THREE (3) 400 AMP METERS FOR FUTURE TENANTS AND ONE (1) 200 AMP METER FOR HOUSE LOADS, PANELBOARD 'L1'.

21 STUB UP TWO 2 1/2" CONDUITS PER TENANT SPACE ALONG NORTH WALL FOR FUTURE EXTENSION TO A FUTURE 400 AMP PANELBOARD.

FEEDER SCHEDULE (FXXXXXXX):

F225A4G	4#4/0, 1#4G - 2-1/2"C
F1200A4	4 SETS OF 4#350 - 3"C

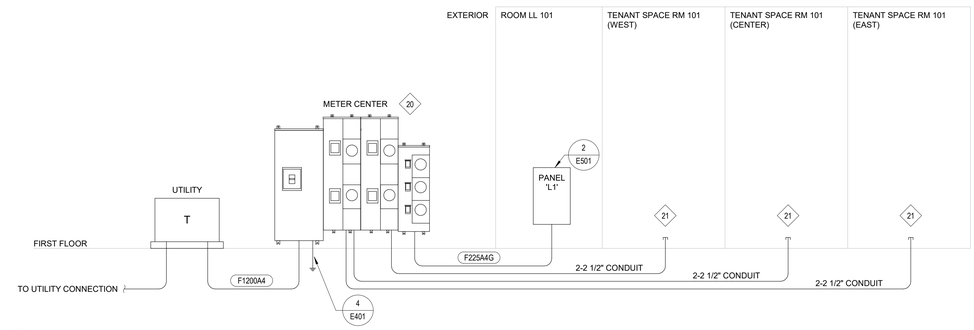

1 POWER RISER DIAGRAM
SCALE: NOT TO SCALE

SYSTEM IDENTIFICATION DECAL

SYSTEM CONDUCTOR IDENTIFICATION
208Y/120V 3Φ 4W
A – PHASE – BLACK
B – PHASE – RED
C – PHASE – BLUE
NEUTRAL – WHITE
GROUND – GREEN

SYSTEM CONDUCTOR IDENTIFICATION
120/240V
A – PHASE – BLACK
B – PHASE – RED
NEUTRAL – WHITE
GROUND – GREEN

SYSTEM CONDUCTOR IDENTIFICATION
480Y/277V 3Φ 4W
A – PHASE – BROWN
B – PHASE – ORANGE
C – PHASE – YELLOW
NEUTRAL – GRAY
GROUND – GREEN

SYSTEM CONDUCTOR IDENTIFICATION
240V DELTA 3Φ 3W
A – PHASE – PINK
B – PHASE – PURPLE
C – PHASE – TAN
GROUND – GREEN

PANEL IDENTIFICATION DECAL

PANEL TYPE — H1 — PANEL DESIGNATION
FED FROM MDP

CR = CRITICAL
EQ = EQUIPMENT
LS = LIFE SAFETY
EM = EMERGENCY

OS = OPTIONAL STANDBY
H = 480V
L = 208V

BRANCH/FEEDER IDENTIFICATION DECAL

PANEL H1

DISCONNECT IDENTIFICATION DECAL

EF-1
480V
FED FROM MDP

TRANSFORMER IDENTIFICATION DECAL

TL1
FED FROM MDP
FEEDS L1

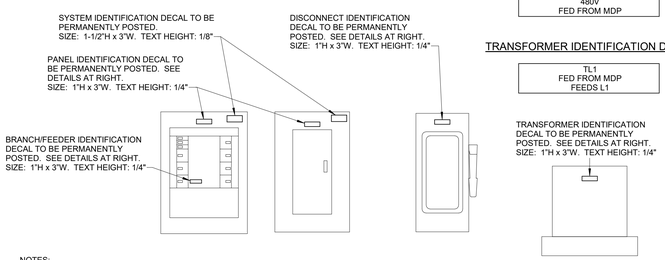

NOTES:

1. DECALS SHALL BE LAMINATED ACRYLIC WITH WHITE ENGRAVED LETTERING ON A BLACK BACKGROUND. PANELS OR EQUIPMENT CONNECTED TO AN ALTERNATE POWER SOURCE SHALL HAVE WHITE ENGRAVED LETTERING ON A RED BACKGROUND.
2. DECALS SHALL BE SIZED TO ACCOMMODATE SPECIFIED LEGENDS BUT NO SMALLER THAN SIZES SHOWN, MINIMUM OF 1/16" THICK.
3. DECALS SHALL BE PUNCHED OR DRILLED FOR MECHANICAL FASTENERS WITH 1/4" GROMMETS IN CORNERS FOR MOUNTING.
4. COLORS FOR 240V DELTA SYSTEMS BASED ON AVAILABLE COLORS OFFERED BY SOUTHWIRE. OTHER COLORS THAT DO NOT CONFLICT WITH OTHER VOLTAGE SYSTEMS PERMITTED.

2 PANELBOARD & EQUIPMENT IDENTIFICATION DETAIL
SCALE: 1/8" = 1'-0"

Branch Panel: L1

Location: Space 10004 **Volts:** 208Y/120 **A.I.C. Rating:** 14,000
Supply From: METER CENTER **Phases:** 3 **MLO / MCB:** MCB
Mounting: SURFACE **Wires:** 4 **FCB / MCB Rating:** 200 A

CKT	Circuit Description	Trip	P	A		B		C		P	Trip	Circuit Description	CKT
1	REC - EXTERIOR	20 A	1	360	68					1	20 A	LTG - LL RM 101	2
3	REC - TENANT SPACE RM 100	20 A	1			540	309			1	20 A	LTG - EXTERIOR	4
5	REC - LL RM 101	20 A	1					360	217	1	20 A	LTG - TENANT SPACE RM 100	6
7	REC - LL RM 101	20 A	1	360	319					1	20 A	LTG - TENANT SPACE RM 100	8
9	SPARE	20 A	1			0	217			1	20 A	LTG - TENANT SPACE RM 100	10
11	SPARE	20 A	1					0	--	1	--	SPACE	12
13	SPARE	20 A	1	0	--					1	--	SPACE	14
15	SPARE	20 A	1			0	--			1	--	SPACE	16
17	SPARE	20 A	1					0	--	1	--	SPACE	18
19	SPARE	20 A	1	0	--					1	--	SPACE	20
21	UH-1 - TENANT SPACE RM 100	20 A	1			445	--			1	--	SPACE	22
23	UH-1 - TENANT SPACE RM 100	20 A	1					445	--	1	--	SPACE	24
25	UH-1 - TENANT SPACE RM 100	20 A	1	445	--					1	--	SPACE	26
27	CUH-1 - LL RM 101	20 A	2			2500	--			1	--	SPACE	28
29	--	--	--					2500	--	1	--	SPACE	30
			Total Load:	1552 VA		4011 VA		3522 VA					
			Total Amps:	13 A		36 A		32 A					

Load Classification	Connected Load	Demand Factor	Estimated Demand	Panel Totals	
LTG	1130 VA	100.00%	1130 VA	**Total Est. Demand:**	9085 VA
REC	1620 VA	100.00%	1620 VA	**Total Est. Demand Current (100% Rated):**	25 A
EQP_CONT	6335 VA	100.00%	6335 VA		
				Non-Cont. Current @ 100%:	4 A
				Continuous Current @ 125%:	26 A
				Total Est. Demand Current (80% Rated):	30 A

Legend:
FCB: Feeder Circuit Breaker
GFI: GFCI Circuit Breaker
LOCK: Lockable Circuit Breaker
MCB: Main Circuit Breaker
MCCB: Molded Case Circuit Breaker
MLO: Main Lug Only
EXTG: Existing Circuit Breaker

Notes:

DESIGNED:	JEF
DRAWN:	JEF
CHECKED:	KJS
ISSUE DATE:	10/18/2024
REVISIONS:	
No.:	
DATE:	
BY:	
DESCRIPTION:	

STATE OF NEBRASKA ELECTRICAL ENGINEER
KEVIN J. SCHMIDT
E-15143
10/18/2024

SCHEMMER
Design with Purpose. Build with Confidence.
1044 North 115th Street, Suite 300, Omaha, Nebraska 68154 | 402.493.4800
CA0666

LANOHA DEVELOPMENT
HAWTHORNE COURT MULTI-TENANT BUILDING
17662 WELCH PLAZA
OMAHA, NE 68154

POWER RISER DIAGRAM

PROJECT NO.: 010347.001

E501

C:\Users\jfant\Documents\Revit_temp\010347001-ELEC_R23_jfantMF-J07.rvt
10/18/2024 2:28:05 PM

EQUIPMENT SCHEDULE

DEVICE	DEVICE DESCRIPTION	VOLTAGE	PH	KW	FLA	HP	STARTER / DISCONNECT TYPE	SIZE	FUSE	PLUG CONFIG	RECEPT CONFIG	FEEDER SIZE	NOTES
CUH-1	CABINET UNIT HEATER	208 V	1	5	-	-	INT	-	-	-	-	2#10, 1#10G - 3/4"C	
UH-1	UNIT HEATER	120 V	1	0.45	-	-	INT	-	-	-	-	2#12, 1#12G - 3/4"C	

LUMINAIRE SCHEDULE

TYPE NO	DESCRIPTION / SPEC NO	TOTAL WATTS	VOLT	MOUNTING	NOTES
I1	INDUSTRIAL STRIP LED - 4' - 5000 LUMEN - ZL1N LITHONIA ZL1N L48 5000LM FST MVOLT 40K 80CRI WH ZACVH	34 VA	MVOLT	SURFACE / CABLE	
I1E	INDUSTRIAL STRIP LED - 4' - 5000 LUMEN - ZL1N - EMERGENCY LITHONIA ZL1N L48 5000LM FST MVOLT 40K 80CRI E10WLCP WH ZACVH	34 VA	MVOLT	SURFACE / CABLE	
W1	WALL PACK LITHONIA WDGE2 LED P3 40K 80CRI T4M MVOLT PIR1FC3V DBLXD	20 VA	MVOLT	WALL / SURFACE	4
W2	WALL PACK LITHONIA WDGE2 LED P3 40K 80CRI T4M MVOLT PIR1FC3V DBLXD	23 VA	MVOLT	WALL / SURFACE	4
W3	WALL PACK LITHONIA WDGE3 LED P3 40K 80CRI R4 MVOLT PIRH1FC3V DBLXD	71 VA	MVOLT	WALL / SURFACE	4
X1C	EXIT SIGN WITH BUGEYE - COMBO LITHONIA LHQM LED R HO SD	5 VA	MVOLT	WALL / CEILING	
X5	EMERGENCY BUGEYE REMOTE HEAD - DUAL - WEATHERPROOF LITHONIA ELA T QWP L0309 SD	3 VA	120 V	WALL / SURFACE	
X6	EMERGENCY BUGEYE REMOTE HEAD - SINGLE WEATHERPROOF LITHONIA ELA QWP L0309 SD	5 VA	120 V	WALL / SURFACE	

GENERAL EQUIPMENT SCHEDULE NOTES:

A. THIS SCHEDULE DISPLAYS SIZING INFORMATION THAT IS GENERIC IN NATURE. SCHEDULE DOES NOT ITEMIZE ALL INSTANCES OF EQUIPMENT. CONTRACTOR SHALL REFER TO THE PLANS FOR FINAL QUANTITIES AND LOCATIONS.

B. MOUNT ALL DISCONNECTS AND STARTERS ON ASSOCIATED EQUIPMENT UNLESS SHOWN OTHERWISE. MAINTAIN WORKING CLEARANCES PER NEC; COORDINATE WITH MECHANICAL CONTRACTOR.

C. BCU = BOX COVER UNIT (COOPER #SSY / #STY OR EQUAL) WITH FUSE.

D. NFD OR FD = NON-FUSED OR FUSED DISCONNECT SWITCH.

E. CS/NFD, FD = COMBINATION STARTER/ NON OR FUSED DISCONNECT SWITCH.

F. INT = INTEGRAL DISCONNECT FURNISHED WITH EQUIPMENT.

G. FHPMC = FRACTIONAL HORSEPOWER MANUAL CONTROLLER.

H. IHPMC = INTEGRAL HORSEPOWER MANUAL CONTROLLER.

I. STE = THERMAL ELEMENT SWITCH. PROVIDE THERMAL UNIT.

J. EXP = DEVICE TO BE EXPLOSION-PROOF.

K. ALL SWITCHES, DISCONNECTS, ETC SHALL BE LOCKABLE.

L. ALL SWITCHES, DISCONNECTS, ETC SHALL BE NEMA 3R WHERE REQUIRED.

M. PROVIDE FUSES AS SHOWN; REVISE SIZES PER ACTUAL NAMEPLATE DATA.

N. STARTER ACCESSORIES:STARTER ACCESSORIES:
1. CONTROL TRANSFORMER
2. HI-O-A SWITCH
3. RED RUN LIGHT
4. 2 NO CONTACTS; 2 NC CONTACTS

O. PROVIDE DUCT DETECTOR, SHUTDOWN RELAY, AND ACCESSORIES AS REQUIRED TO SHUTDOWN HVAC EQUIPMENT 2000 CFM OR HIGHER PER NFPA AND AHJ.

EQUIPMENT SCHEDULE NOTES:

1. XXXX.

LUMINAIRE SCHEDULE NOTES:

1. VERIFY CABLE / CHAIN LENGTH AND ADJUST ACCORDINGLY.
2. COORDINATE MOUNTING HEIGHT BEFORE ROUGH-IN.
3. MOUNT ABOVE MIRROR.
4. SEE ARCHITECTURAL EXTERIOR BUILDING ELEVATIONS.
5. PROVIDE GYPSUM TRIM RING WHERE REQUIRED. (SUPPORT TRIM RING FROM STRUCTURE.) SEE ARCH A6 SERIES SHEETS FOR REFLECTED CEILING PLANS.

ISSUE DATE: 10/18/2024
REVISIONS:
No.: DATE: BY: DESCRIPTION:

DESIGNED: JEF
DRAWN: JEF
CHECKED: KJS

NEBRASKA ELECTRICAL ENGINEER
JEFFREY E. FISCHER
20120101
E-15143
STATE OF NEBRASKA

10/18/2024

SCHEMMER
Design with Purpose. Build with Confidence.

1044 North 115th Street, Suite 300, Omaha, Nebraska 68154 | 402.493.4800
CA0666

LANOHA DEVELOPMENT
HAWTHORNE COURT MULTI-TENANT BUILDING
17662 WELCH PLAZA
OMAHA, NE 68154

LUMINAIRE & EQUIPMENT SCHEDULES

PROJECT NO.: 010347.001

E601